SECTION ATC

AUTOMATIC AIR CONDITIONER

CONTENTS

PRECAUTIONS

PFP:00001

Precautions for Supplemental Restraint System (SRS) “AIR BAG” and “SEAT BELT PRE-TENSIONER”

AJS001XF

The Supplemental Restraint System such as “AIR BAG” and “SEAT BELT PRE-TENSIONER”, used along with a front seat belt, helps to reduce the risk or severity of injury to the driver and front passenger for certain types of collision. This system includes seat belt switch inputs and dual stage front air bag modules. The SRS system uses the seat belt switches to determine the front air bag deployment, and may only deploy one front air bag, depending on the severity of a collision and whether the front occupants are belted or unbelted.
Information necessary to service the system safely is included in the SRS and SB section of this Service Manual.

WARNING:

- **To avoid rendering the SRS inoperative, which could increase the risk of personal injury or death in the event of a collision which would result in air bag inflation, all maintenance must be performed by an authorized NISSAN/INFINITI dealer.**
- **Improper maintenance, including incorrect removal and installation of the SRS, can lead to personal injury caused by unintentional activation of the system. For removal of Spiral Cable and Air Bag Module, see the SRS section.**
- **Do not use electrical test equipment on any circuit related to the SRS unless instructed to in this Service Manual. SRS wiring harnesses can be identified by yellow and/or orange harnesses or harness connectors.**

Precautions Necessary for Steering Wheel Rotation After Battery Disconnect

AJS001XG

NOTE:

- This Procedure is applied only to models with Intelligent Key system and NVIS/IVIS (NISSAN/INFINITI VEHICLE IMMOBILIZER SYSTEM - NATS).
- Remove and install all control units after disconnecting both battery cables with the ignition knob in the ″LOCK″ position.
- Always use CONSULT-II to perform self-diagnosis as a part of each function inspection after finishing work. If DTC is detected, perform trouble diagnosis according to self-diagnostic results.

For models equipped with the Intelligent Key system and NVIS/IVIS, an electrically controlled steering lock mechanism is adopted on the key cylinder.
For this reason, if the battery is disconnected or if the battery is discharged, the steering wheel will lock and steering wheel rotation will become impossible.
If steering wheel rotation is required when battery power is interrupted, follow the procedure below before starting the repair operation.

OPERATION PROCEDURE

1. Connect both battery cables.

   NOTE:
   Supply power using jumper cables if battery is discharged.
2. Use the Intelligent Key or mechanical key to turn the ignition switch to the ″ACC″ position. At this time, the steering lock will be released.
3. Disconnect both battery cables. The steering lock will remain released and the steering wheel can be rotated.
4. Perform the necessary repair operation.
5. When the repair work is completed, return the ignition switch to the ″LOCK″ position before connecting the battery cables. (At this time, the steering lock mechanism will engage.)
6. Perform a self-diagnosis check of all control units using CONSULT-II.

Precautions for Procedures without Cowl Top Cover

AJS001XH

When performing the procedure after removing cowl top cover, cover the lower end of windshield with urethane, etc.

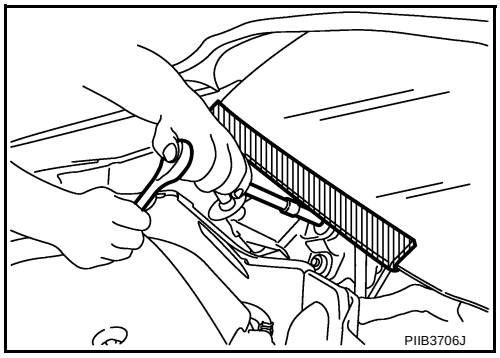

Precautions for Working with HFC-134a (R-134a)

AJS001XI

CAUTION:

- **CFC-12 (R-12) refrigerant and HFC-134a (R-134a) refrigerant are not compatible. If the refrigerants are mixed and compressor malfunction is likely to occur, refer to "CONTAMINATED REFRIGERANT" below. To determine the purity of HFC-134a (R-134a) in the vehicle and recovery tank, use Refrigerant Recovery/Recycling Recharging equipment and Refrigerant Identifier.**
- **Use only specified lubricant for the HFC-134a (R-134a) A/C system and HFC-134a (R-134a) components. If lubricant other than that specified is used, compressor malfunction is likely to occur.**
- **The specified HFC-134a (R-134a) lubricant rapidly absorbs moisture from the atmosphere. The following handling precautions must be observed:**
  - **When removing refrigerant components from a vehicle, immediately cap (seal) the component to minimize the entry of moisture from the atmosphere.**
  - **When installing refrigerant components to a vehicle, never remove the caps (unseal) until just before connecting the components. Connect all refrigerant loop components as quickly as possible to minimize the entry of moisture into system.**
  - **Only use the specified lubricant from a sealed container. Immediately reseal containers of lubricant. Without proper sealing, lubricant will become moisture saturated and should not be used.**
  - **Avoid breathing A/C refrigerant and lubricant vapor or mist. Exposure may irritate eyes, nose and throat. Remove HFC-134a (R-134a) from the A/C system, using certified service equipment meeting requirements of SAE J-2210 [HFC-134a (R-134a) recycling equipment], or J-2209 [HFC-134a (R-134a) recovery equipment]. If accidental system discharge occurs, ventilate work area before resuming service. Additional health and safety information may be obtained from refrigerant and lubricant manufacturers.**
  - **Never allow lubricant (Nissan A/C System Oil Type S) to come in contact with styrofoam parts. Damage may result.**

CONTAMINATED REFRIGERANT

If a refrigerant other than pure HFC-134a (R-134a) is identified in a vehicle, take appropriate steps shown below:

- Explain to the customer that environmental regulations prohibit the release of contaminated refrigerant into the atmosphere.
- Explain that recovery of the contaminated refrigerant could damage service equipment and refrigerant supply.
- Suggest the customer return the vehicle to the location of previous service where the contamination may have occurred.
- In case of repairing, recover the refrigerant using only **dedicated equipment and containers. Never recover contaminated refrigerant into the existing service equipment.** If the facility does not have dedicated recovery equipment, contact a local refrigerant product retailer for available service. This refrigerant must be disposed of in accordance with all federal and local regulations. In addition, replacement of all refrigerant system components on the vehicle is recommended.
- If the vehicle is within the warranty period, the air conditioner warranty is void. Please contact Nissan Customer Affairs for further assistance.

General Refrigerant Precautions

AJS001XJ

WARNING:

- **Never release refrigerant into the air. Use approved recovery/recycling equipment to capture the refrigerant every time an air conditioning system is discharged.**
- **Always wear eye and hand protection (goggles and gloves) when working with any refrigerant or air conditioning system.**
- **Never store or heat refrigerant containers above 52°C (125°F).**
- **Never heat a refrigerant container with an open flame; if container warming is required, place the bottom of the container in a warm pail of water.**
- **Never intentionally drop, puncture, or incinerate refrigerant containers.**
- **Keep refrigerant away from open flames: poisonous gas will be produced if refrigerant burns.**
- **Refrigerant will displace oxygen, therefore be certain to work in well ventilated areas to prevent suffocation.**
- **Never pressure test or leak test HFC-134a (R-134a) service equipment and/or vehicle air conditioning systems with compressed air during repair. Some mixtures of air and HFC-134a (R-134a) have been shown to be combustible at elevated pressures. These mixtures, if ignited, may cause injury or property damage. Additional health and safety information may be obtained from refrigerant manufacturers.**

Precautions for Refrigerant Connection

AJS001XL

A new type refrigerant connection has been introduced to all refrigerant lines except the following location.

- Expansion valve to evaporator
- Refrigerant pressure sensor to condenser

ABOUT ONE-TOUCH JOINT

Description

- One-touch joints are pipe joints which do not require tools during piping connection.
- Unlike conventional connection methods using union nuts and flanges, controlling tightening torque at connection point is not necessary.
- When removing a pipe joint, use a disconnector.

COMPONENT PARTS

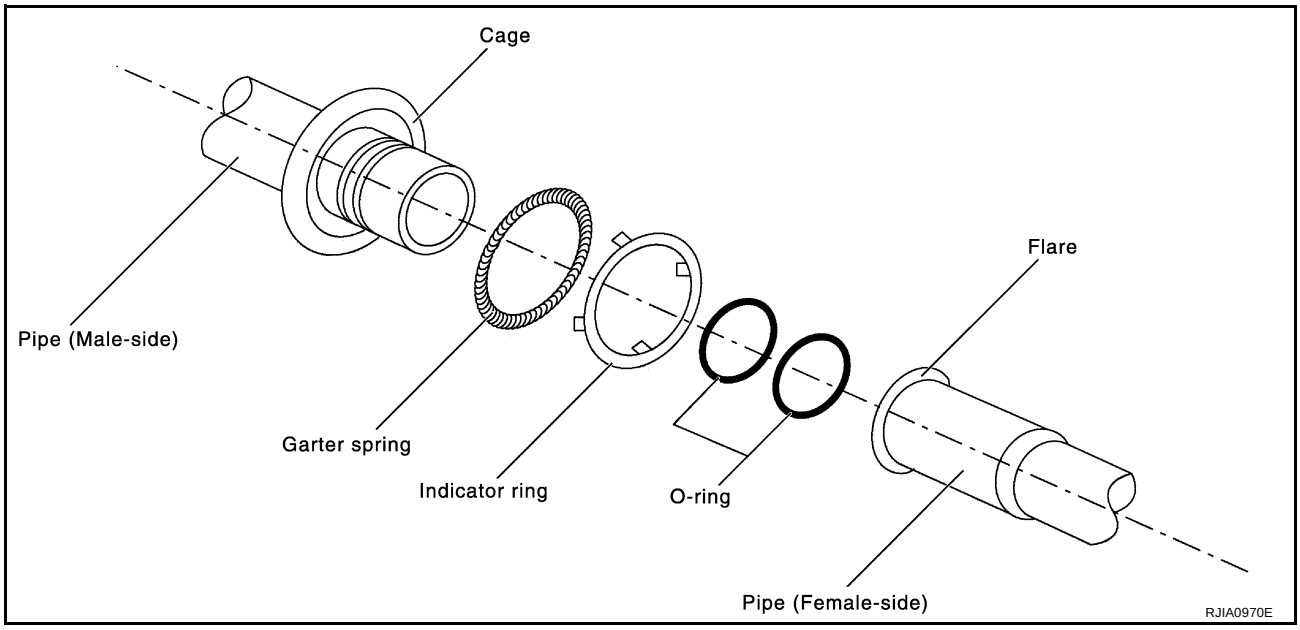

FUNCTIONS OF COMPONENT PARTS

Pipe (Male side)	● Retains O-rings. ● Retains garter spring in cage.
Garter spring	Anchors female side piping.
Indicator ring	When connection is made properly, this is ejected from male-side piping. (This part is no longer necessary after connection.)
O-ring	Seals connection point. (Not reusable)
Pipe (Female side)	● Seals connection by compressing O-rings. ● Anchors piping connection using flare and garter spring.

NOTE:

- Garter spring cannot be removed from cage of male-side piping.
- Indicator ring remains near piping connection point, however, this is not a malfunction. (This is to check piping connection during factory assembly.)

REMOVAL

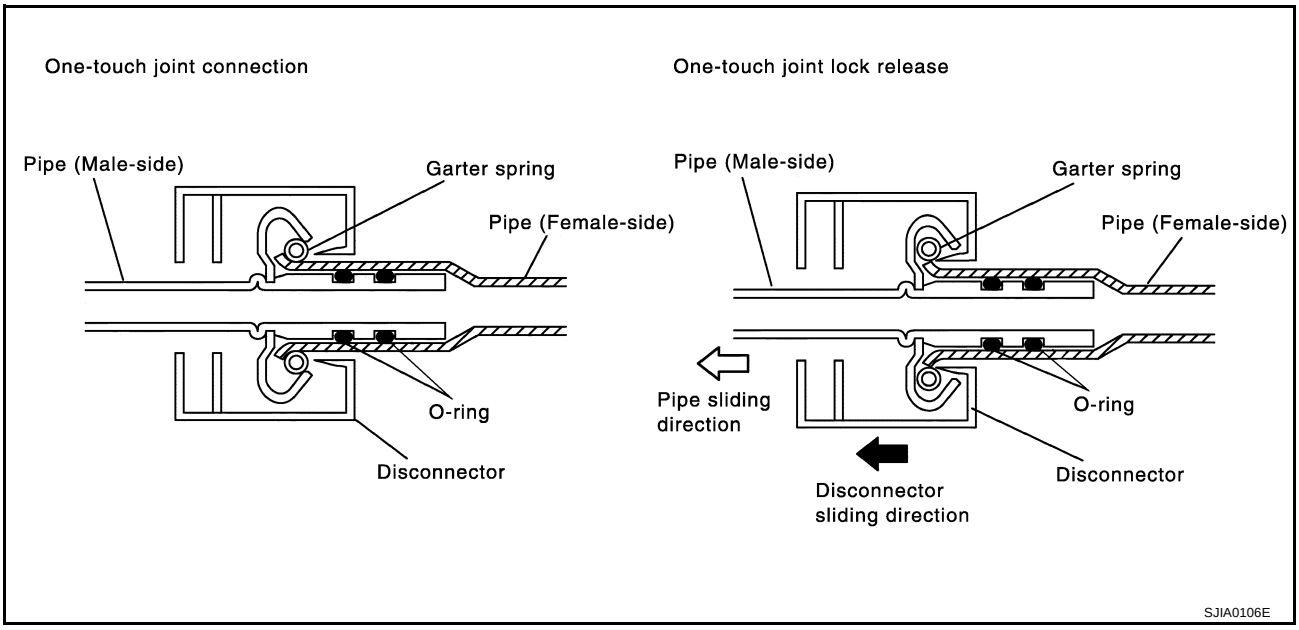

1. Clean piping connection point, and set a disconnector.
2. Slide disconnector in axial direction of piping, and stretch garter spring with tapered point of disconnector.
3. Slide disconnector farther so that inside diameter of garter spring becomes larger than outside diameter of female-side piping flare. Then male-side piping can be disconnected.

INSTALLATION

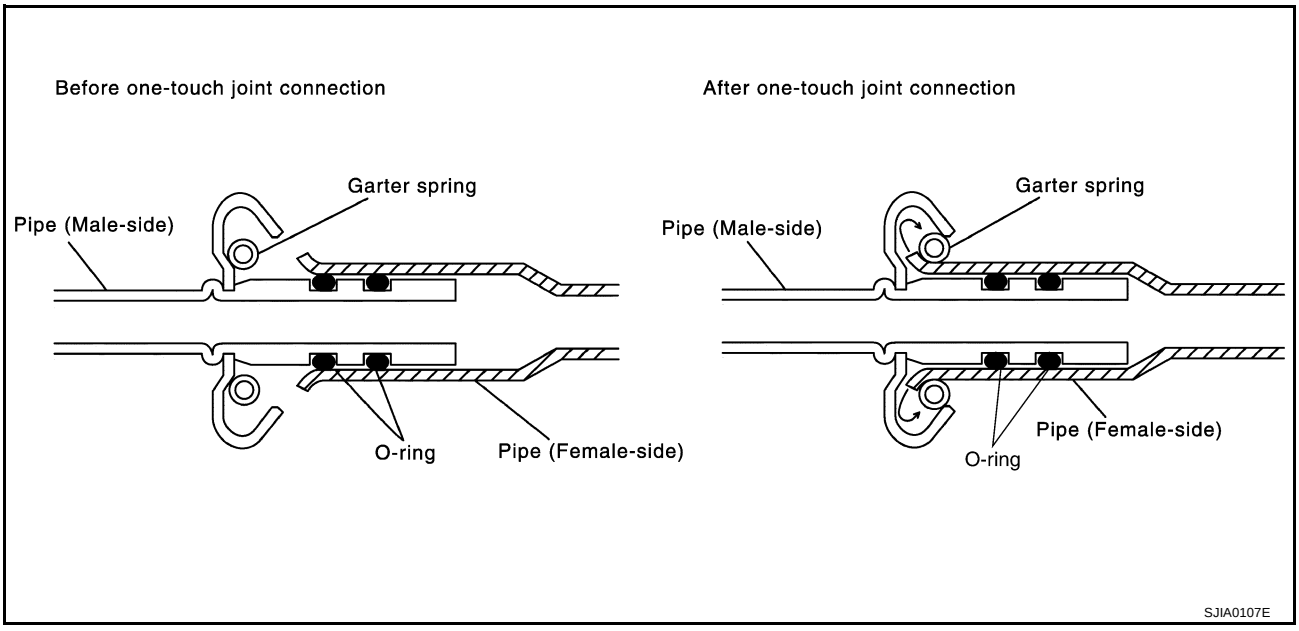

1. Clean piping connection points, and insert male-side piping into female-side piping.
2. Push inserted male-side piping harder so that female-side piping flare stretches garter spring.
3. If inside diameter of garter spring becomes larger than outside diameter of female-side piping flare, garter spring seats on flare. Then, it fits in between male-side piping cage and female-side piping flare to anchor piping connection point.

   NOTICE:
   When garter spring seats on flare, and fits in between male-side piping cage and female-side piping flare, it clicks.

   CAUTION:
   - **Female-side piping connection point is thin. So, when inserting male-side piping, take care not to deform female-side piping. Slowly insert it in axial direction.**
   - **Insert piping securely until a click is heard.**

- **After piping connection is completed, pull male-side piping by hand to make sure that connection does not come loose.**

NOTE:
One-touch joint connection is used in points below.

- Low-pressure pipe 1 to low-pressure pipe 2 (O-ring size: 16)
- High-pressure pipe 1 to high-pressure pipe 2 (O-ring size: 8)
- High-pressure pipe 2 to high-pressure pipe 3 (O-ring size: 8)
- Low-pressure flexible hose to low-pressure pipe 1 (O-ring size: 16)
- Condenser to high-pressure flexible hose (O-ring size: 12)
- Condenser to high-pressure pipe 1 (O-ring size: 8)

FEATURES OF NEW TYPE REFRIGERANT CONNECTION

- The O-ring has been relocated. It has also been provided with a groove for proper installation. This eliminates the chance of the O-ring being caught in, or damaged by, the mating part. The sealing direction of the O-ring is now set vertically in relation to the contacting surface of the mating part to improve sealing characteristics.
- The reaction force of the O-ring will not occur in the direction that causes the joint to pull out, thereby facilitating piping connections.

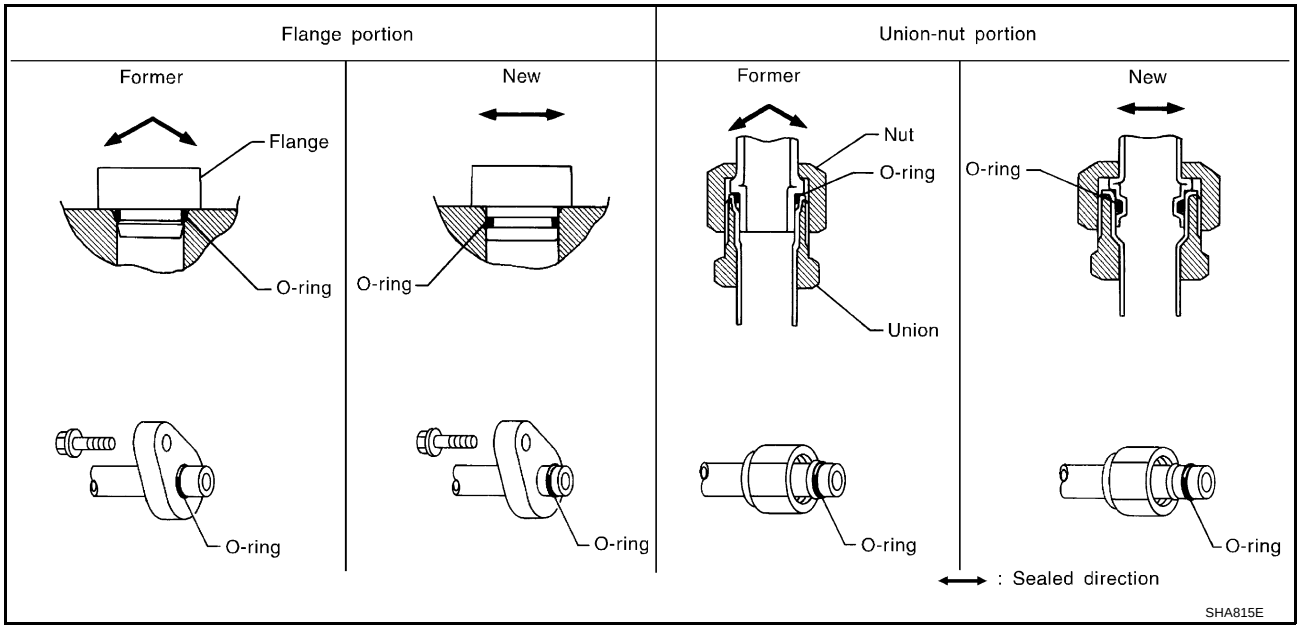

O-RING AND REFRIGERANT CONNECTION

VQ35DE

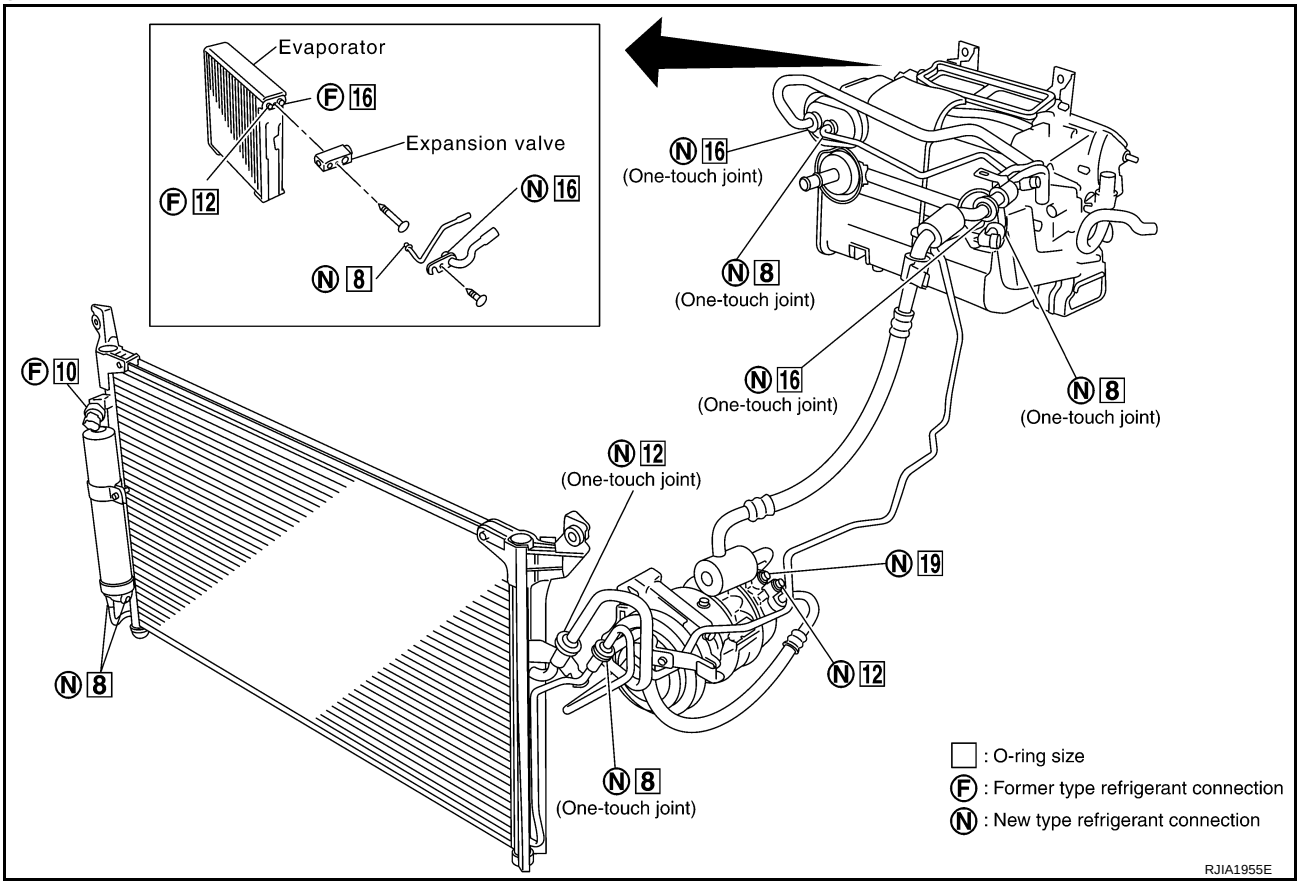

VK45DE

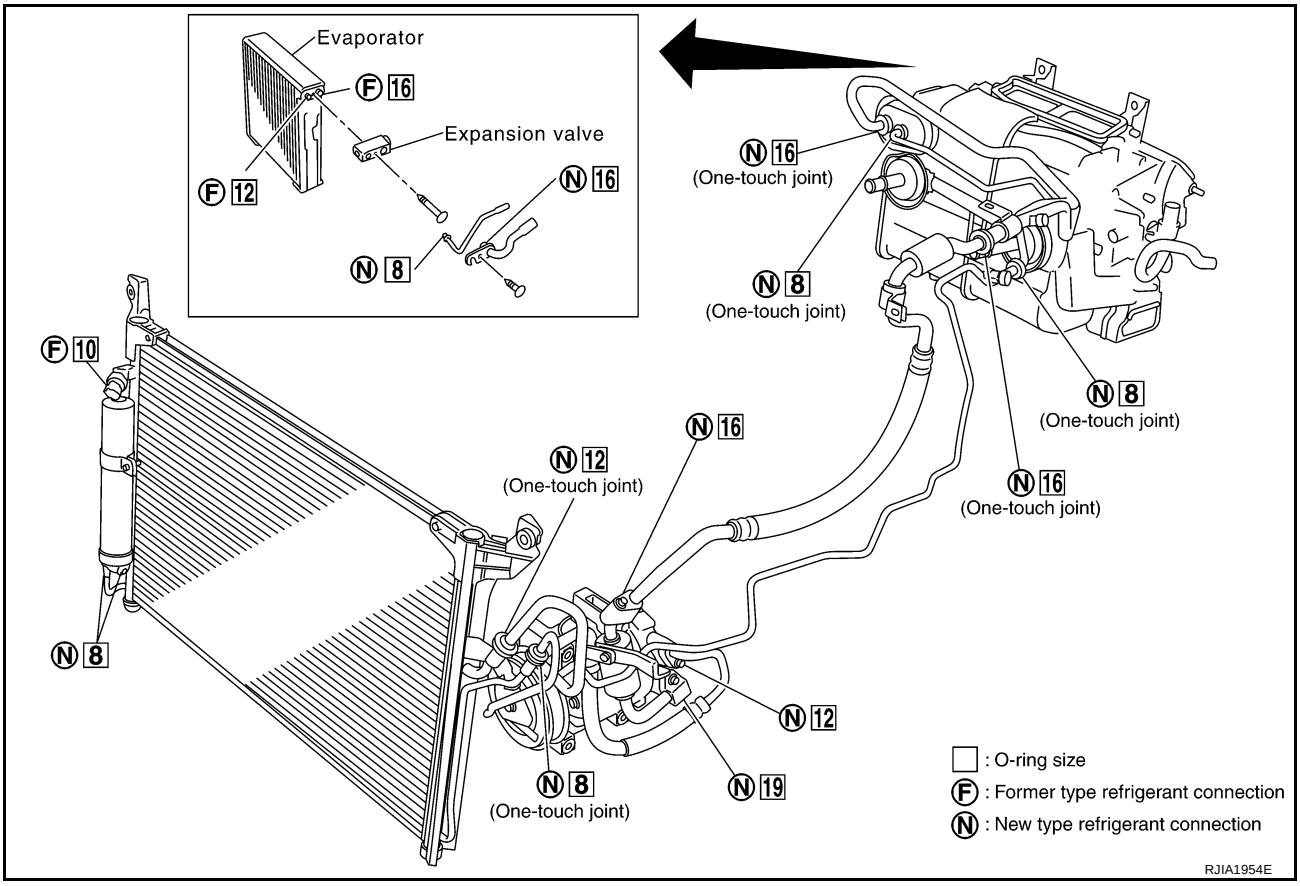

CAUTION:
The new and former refrigerant connections use different O-ring configurations. Never confuse O-rings since they are not interchangeable. If a wrong O-ring is installed, refrigerant will leak at, or around, the connection.

O-Ring Part Numbers and Specifications

Connection type	Piping connection point		Part number	QTY	O-ring size
New	Low-pressure pipe 1 to low-pressure pipe 2 (One-touch joint)		92473 N8221	2	16
	Low-pressure pipe 2 to expansion valve		92473 N8210	1	16
	High-pressure pipe 1 to high-pressure pipe 2 (One-touch joint)		92471 N8221	2	8
	High-pressure pipe 3 to expansion valve		92471 N8210	1	8
	High-pressure pipe 2 to high-pressure pipe 3 (One-touch joint)		92471 N8221	2	8
	Condenser to high-pressure flexible hose (One-touch joint)		92472 N8221	2	12
	Condenser to high-pressure pipe 1 (One-touch joint)		92471 N8221	2	8
	Low-pressure flexible hose to low-pressure pipe 1 (One-touch joint)		92473 N8221	2	16
	Compressor to low-pressure flexible hose		92474 N8210	1	19
	Compressor to high-pressure flexible hose		92472 N8210	1	12
	Liquid tank to condenser pipe	Inlet	92471 N8210	1	8
		Outlet		1	
Former	Refrigerant pressure sensor to condenser		J2476 89956	1	10
	Expansion valve to evaporator	Inlet	92475 71L00	1	12
		Outlet	92475 72L00	1	16

WARNING:
Make sure all refrigerant is discharged into the recycling equipment and the pressure in the system is less than atmospheric pressure. Then gradually loosen the discharge side hose fitting and remove it.

CAUTION:
When replacing or cleaning refrigerant cycle components, observe the following.

- **When the compressor is removed, store it in the same way as it is when mounted on the car. Failure to do so will cause lubricant to enter the low-pressure chamber.**
- **When connecting tubes, always use a torque wrench and a back-up wrench.**
- **After disconnecting tubes, immediately plug all openings to prevent entry of dirt and moisture.**
- **When installing an air conditioner in the vehicle, connect the pipes at the final stage of the operation. Never remove the seal caps of pipes and other components until just before required for connection.**
- **Allow components stored in cool areas to warm to working area temperature before removing seal caps. This prevents condensation from forming inside A/C components.**
- **Thoroughly remove moisture from the refrigeration system before charging the refrigerant.**
- **Always replace used O-rings.**
- **When connecting tube, apply lubricant to circle of the O-rings shown in illustration. Be careful not to apply lubricant to threaded portion.**

  Lubricant name : Nissan A/C System Oil Type S
  Part number : KLH00-PAGS0

- **O-ring must be closely attached to dented portion of tube.**
- **When replacing the O-ring, be careful not to damage O-ring and tube.**
- **Connect tube until a click can be heard, then tighten the nut or bolt by hand until snug. Make sure that the O-ring is installed to tube correctly.**

- **After connecting line, perform leak test and make sure that there is no leakage from connections. When the refrigerant leaking point is found, disconnect that line and replace the O-ring. Then tighten connections of seal seat to the specified torque.**

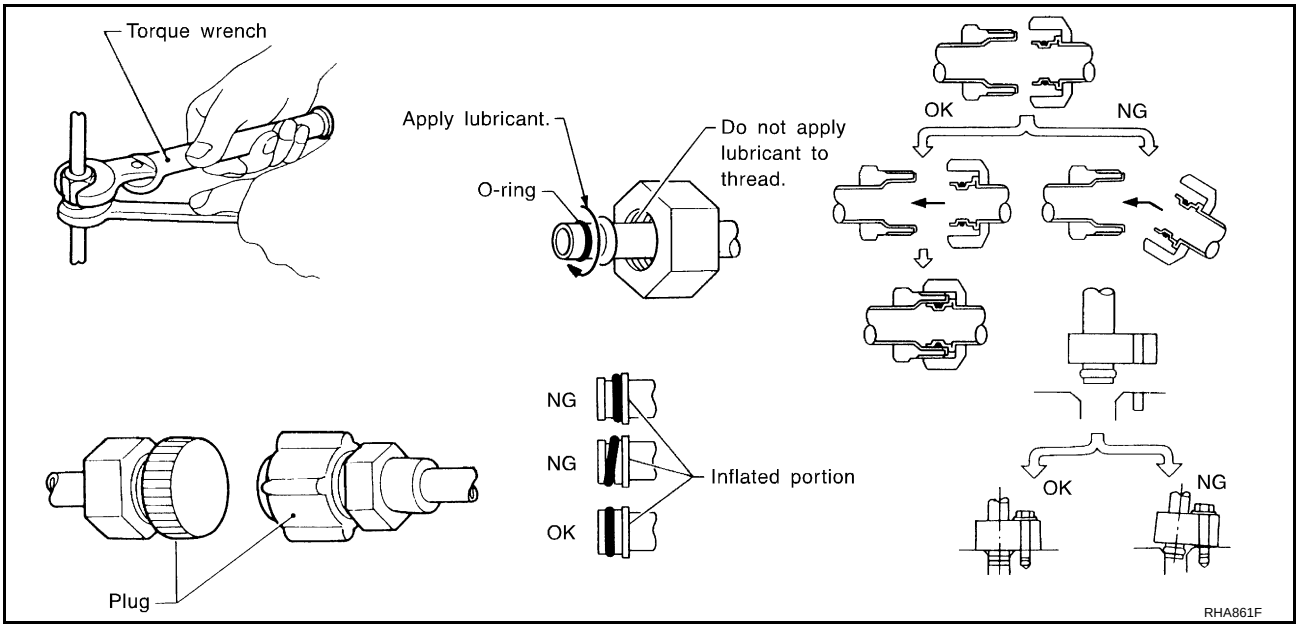

Precautions for Servicing Compressor

AJS001XM

- **Plug all openings to prevent moisture and foreign matter from entering.**
- **When the compressor is removed, store it in the same way as it is when mounted on the car.**
- **When replacing or repairing compressor, follow “Maintenance of Lubricant Quantity in Compressor” exactly. Refer to ATC-27, "Maintenance of Lubricant Quantity in Compressor" .**
- **Keep friction surfaces between clutch and pulley clean. If the surface is contaminated with lubricant, wipe it off by using a clean waste cloth moistened with thinner.**
- **After compressor service operation, turn the compressor shaft by hand more than five turns in both directions. This will equally distribute lubricant inside the compressor. After the compressor is installed, let the engine idle and operate the compressor for one hour.**
- **After replacing the compressor magnet clutch, apply voltage to the new one and check for normal operation.**

Precautions for Service Equipment

AJS001XN

RECOVERY/RECYCLING EQUIPMENT

Be certain to follow the manufacturer’s instructions for machine operation and machine maintenance. Never introduce any refrigerant other than that specified into the machine.

ELECTRONIC LEAK DETECTOR

Be certain to follow the manufacturer’s instructions for tester operation and tester maintenance.

VACUUM PUMP

The lubricant contained inside the vacuum pump is not compatible with the specified lubricant for HFC-134a (R-134a) A/C systems. The vent side of the vacuum pump is exposed to atmospheric pressure. So the vacuum pump lubricant may migrate out of the pump into the service hose. This is possible when the pump is switched off after evacuation (vacuuming) and hose is connected to it.
To prevent this migration, use a manual valve placed near the hose-to-pump connection, as follows.

- Usually vacuum pumps have a manual isolator valve as part of the pump. Close this valve to isolate the service hose from the pump.
- For pumps without an isolator, use a hose equipped with a manual shut-off valve near the pump end. Close the valve to isolate the hose from the pump.
- If the hose has an automatic shut-off valve, disconnect the hose from the pump. As long as the hose is connected, the valve is open and lubricating oil may migrate.

Some one-way valves open when vacuum is applied and close under no vacuum condition. Such valves may restrict the pump's ability to pull a deep vacuum and are not recommended.

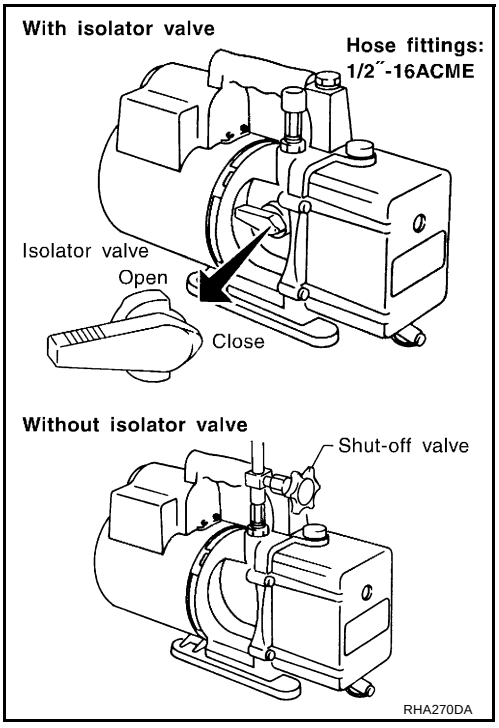

MANIFOLD GAUGE SET

Be certain that the gauge face indicates HFC-134a or R-134a. Be sure the gauge set has 1/2″-16 ACME threaded connections for service hoses. Confirm the set has been used only with refrigerant HFC-134a (R-134a) and specified lubricants.

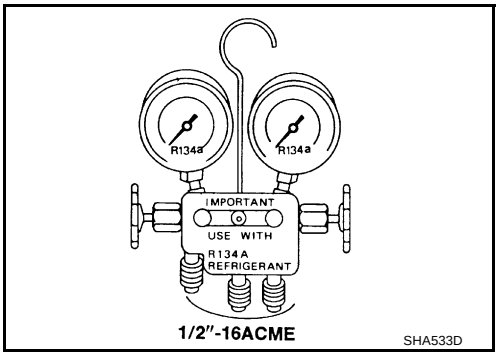

SERVICE HOSES

Be certain that the service hoses display the markings described (colored hose with black stripe). All hoses must include positive shut-off devices (either manual or automatic) near the end of the hoses opposite to the manifold gauge.

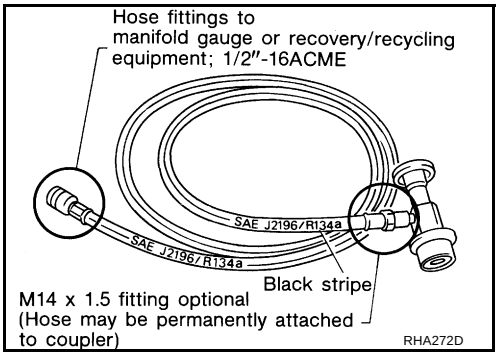

SERVICE COUPLERS

Never attempt to connect HFC-134a (R-134a) service couplers to a CFC-12 (R-12) A/C system. The HFC-134a (R-134a) couplers will not properly connect to the CFC-12 (R-12) system. However, if an improper connection is attempted, discharging and contamination may occur.

Shut-off valve rotation	A/C service valve
Clockwise	Open
Counterclockwise	Close

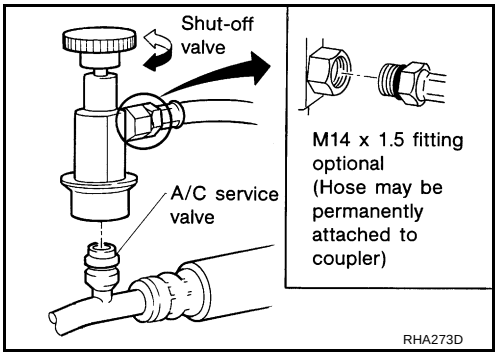

REFRIGERANT WEIGHT SCALE

Verify that no refrigerant other than HFC-134a (R-134a) and specified lubricants have been used with the scale. If the scale controls refrigerant flow electronically, the hose fitting must be 1/2″ -16 ACME.

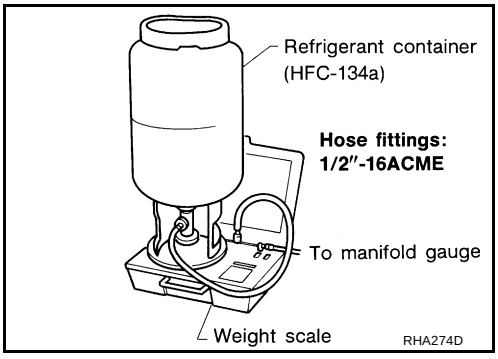

CHARGING CYLINDER

Using a charging cylinder is not recommended. Refrigerant may be vented into air from cylinder′s top valve when filling the cylinder with refrigerant. Also, the accuracy of the cylinder is generally less than that of an electronic scale or of quality recycle/recharge equipment.

Precautions for Leak Detection Dye

AJS001XO

- The A/C system contains a fluorescent leak detection dye used for locating refrigerant leaks. An ultraviolet (UV) lamp is required to illuminate the dye when inspecting for leaks.
- Always wear fluorescence enhancing UV safety goggles to protect your eyes and enhance the visibility of the fluorescent dye.
- The fluorescent dye leak detector is not a replacement for an electronic refrigerant leak detector. The fluorescent dye leak detector should be used in conjunction with an electronic refrigerant leak detector (SST: J-41995) to pin-point refrigerant leaks.
- For your safety and your customer's satisfaction, read and follow all manufacture′s operating instructions and precautions prior to performing the work.
- A compressor shaft seal should not be repaired because of dye seepage. The compressor shaft seal should only be repaired after confirming the leak with an electronic refrigerant leak detector (SST: J-41995).
- Always remove any remaining dye from the leak area after repairs are completed to avoid a misdiagnosis during a future service.
- Never allow dye to come into contact with painted body panels or interior components. If dye is spilled, clean immediately with the approved dye cleaner. Fluorescent dye left on a surface for an extended period of time cannot be removed.
- Never spray the fluorescent dye cleaning agent on hot surfaces (engine exhaust manifold, etc.).
- Never use more than one refrigerant dye bottle (1/4 ounce /7.4 cc) per A/C system.
- Leak detection dyes for HFC-134a (R-134a) and CFC-12 (R-12) A/C systems are different. Never use HFC-134a (R-134a) leak detection dye in CFC-12 (R-12) A/C system or CFC-12 (R-12) leak detection dye in HFC-134a (R-134a) A/C system, or A/C system damage may result.
- The fluorescent properties of the dye will remain for three years or little over unless a compressor malfunction occurs.

IDENTIFICATION

NOTE:
Vehicles with factory installed fluorescent dye have a green label.
Vehicles without factory installed fluorescent dye have a blue label.

IDENTIFICATION LABEL FOR VEHICLE

Vehicles with factory installed fluorescent dye have this identification label on the front side of hood.

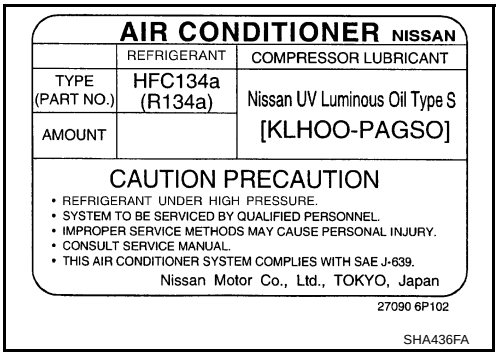

PREPARATION

PFP:00002

Special Service Tools

AJS00143

The actual shapes of Kent-Moore tools may differ from those of special service tools illustrated here.

Tool number (Kent-Moore No.) Tool name		Description
KV99106100 (J-41260) Clutch disc wrench	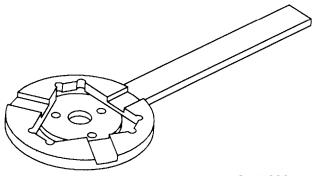 S-NT232 When replacing the magnetic clutch in the above compressor, use a clutch disc wrench with the pin side on the clutch disc to remove it. 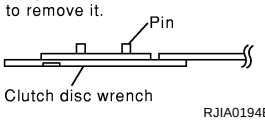 RJIA0194E	Removing shaft nut and clutch disc
KV99232340 (J-38874) Clutch disc puller	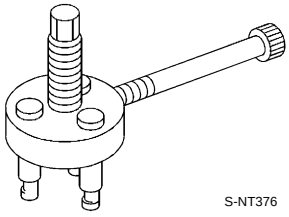 S-NT376	Removing clutch disc
KV99106200 (J-41261) Pulley installer	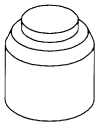 S-NT235	Installing pulley
9253089908 (for high-pressure pipe 1) (-) 9253089912 (for high-pressure flexible hose) (-) 9253089916 (for low-pressure pipe 1 and low-pressure flexible hose) (-) Disconnector tool set (J-45815)	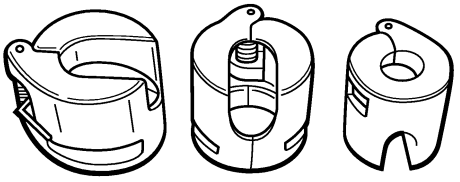 9253089916 (16 mm) 9253089912 (12 mm) 9253089908 (8 mm) Disconnector tool set : J-45815 SJIA1274E	Disconnect one-touch joint connection

HFC-134a (R-134a) Service Tools and Equipment

AJS00144

Never mix HFC-134a (R-134a) refrigerant and/or its specified lubricant with CFC-12 (R-12) refrigerant and/or its lubricant.
Separate and non-interchangeable service equipment must be used for handling each type of refrigerant/lubricant.
Refrigerant container fittings, service hose fittings and service equipment fittings (equipment which handles refrigerant and/or lubricant) are different between CFC-12 (R-12) and HFC-134a (R-134a). This is to avoid mixed use of the refrigerants/lubricant.
Never use adapters that convert one size fitting to another: refrigerant/lubricant contamination will occur and compressor malfunction will result.

Tool number (Kent-Moore No.) Tool name		Description
HFC-134a (R-134a) refrigerant	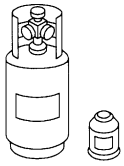 S-NT196	Container color: Light blue Container marking: HFC-134a (R-134a) Fitting size: Thread size ● Large container 1/2″ -16 ACME
KLH00-PAGS0 (-) Nissan A/C System Oil Type S (DH-PS)	 S-NT197	Type: Polyalkylene glycol oil (PAG), type S (DH-PS) Application: HFC-134a (R-134a) wobble (swash) plate compressors (Nissan only) Capacity: 40 mℓ (1.4 US fl oz., 1.4 Imp fl oz.)
(AC-R2005-NI) ACR5 A/C Service Center	 WJIA0293E	Function: Refrigerant recovery, recycling and recharging
(J-41995) Electrical leak detector	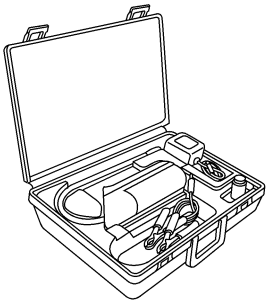 AHA281A	Power supply: DC 12 V (Battery terminal)

Tool number (Kent-Moore No.) Tool name		Description
(J-43926) Refrigerant dye leak detection kit Kit includes: (J-42220) UV lamp and UV safety goggles (J-41459) HFC-134a (R-134a) dye injector Use with J-41447, 1/4 ounce bottle (J-41447) HFC-134a (R-134a) fluorescent leak detection dye (Box of 24, 1/4 ounce bottles) (J-43872) Refrigerant dye cleaner	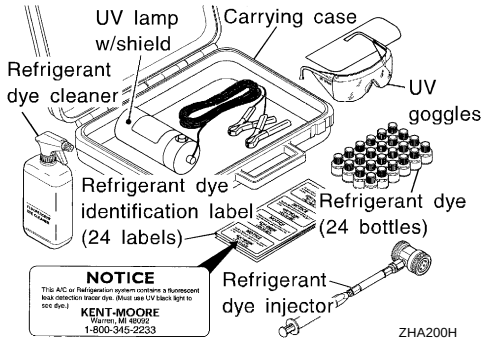	Power supply: DC 12 V (Battery terminal)
(J-42220) UV lamp and UV safety goggles	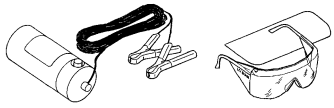	Power supply: DC 12 V (Battery terminal) For checking refrigerant leak when fluorescent dye is installed in A/C system Includes: UV lamp and UV safety goggles
(J-41447) HFC-134a (R-134a) fluorescent leak detection dye (Box of 24, 1/4 ounce bottles)	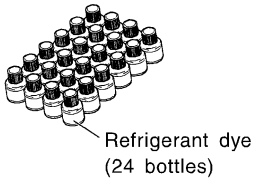	Application: For HFC-134a (R-134a) PAG oil Container: 1/4 ounce (7.4 cc) bottle (Includes self-adhesive dye identification labels for affixing to vehicle after charging system with dye.)
(J-41459) HFC-134a (R-134a) dye injector Use with J-41447, 1/4 ounce bottle	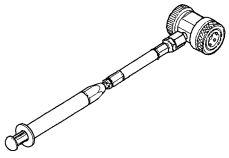	For injecting 1/4 ounce of fluorescent leak detection dye into A/C system
(J-43872) Refrigerant dye cleaner		For cleaning dye spills
(J-39183) Manifold gauge set (with hoses and couplers)	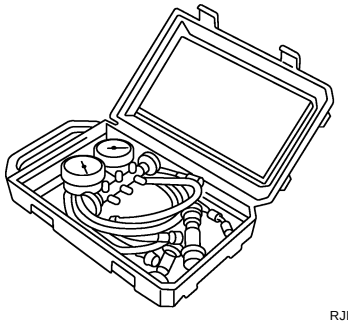	Identification: ● The gauge face indicates HFC-134a (R-134a). Fitting size: Thread size ● 1/2″ -16 ACME

Tool number (Kent-Moore No.) Tool name		Description
Service hoses ● High-pressure side hose (J-39501-72) ● Low-pressure side hose (J-39502-72) ● Utility hose (J-39476-72)	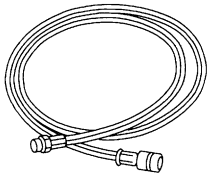 S-NT201	Hose color: ● Low hose: Blue with black stripe ● High hose: Red with black stripe ● Utility hose: Yellow with black stripe or green with black stripe Hose fitting to gauge: ● 1/2″ -16 ACME
Service couplers ● High-pressure side coupler (J-39500-20) ● Low-pressure side coupler (J-39500-24)	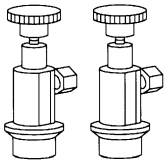 S-NT202	Hose fitting to service hose: ● M14 x 1.5 fitting is optional or permanently attached.
(J-39650) Refrigerant weight scale	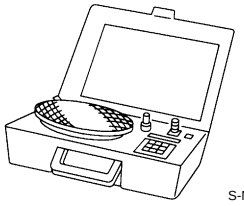 S-NT200	For measuring of refrigerant Fitting size: Thread size ● 1/2″ -16 ACME
(J-39649) Vacuum pump (Including the isolator valve)	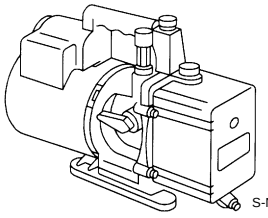 S-NT203	Capacity: ● Air displacement: 4 CFM ● Micron rating: 20 microns ● Oil capacity: 482 g (17 oz.) Fitting size: Thread size ● 1/2″ -16 ACME

Commercial Service Tools

AJS00145

Tool name		Description
Refrigerant identifier equipment	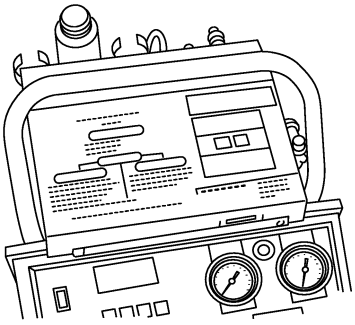 RJIA0197E	Checking for refrigerant purity and system contamination
Power tool	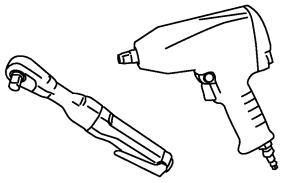 PBIC0190E	For loosening bolts and nuts

REFRIGERATION SYSTEM

PFP:KA990

Refrigerant Cycle

AJS00146

REFRIGERANT FLOW

The refrigerant flows in the standard pattern, that is, through the compressor, the condenser with liquid tank, through the evaporator, and back to the compressor. The refrigerant evaporation through the evaporator is controlled by an externally equalized expansion valve, located inside the evaporator case.

FREEZE PROTECTION

To prevent evaporator frozen up, the evaporator air temperature is monitored, and the voltage signal to the unified meter and A/C auto amp. will make the A/C relay go OFF and stop the compressor.

Refrigerant System Protection

AJS00147

REFRIGERANT PRESSURE SENSOR

The refrigerant system is protected against excessively high- or low-pressure by the refrigerant pressure sensor, located on the condenser. If the system pressure rises above, or falls below the specifications, the refrigerant pressure sensor detects the pressure inside the refrigerant line and sends the voltage signal to the ECM. ECM makes the A/C relay go OFF and stops the compressor when pressure on the high-pressure side detected by refrigerant pressure sensor is over about 2,746 kPa (28 kg/cm^2 , 398 psi), or below about 134 kPa (1.4 kg/cm^2 , 20 psi).

PRESSURE RELIEF VALVE

The refrigerant system is also protected by a pressure relief valve, located in the rear head of the compressor. When the pressure of refrigerant in the system increases to an unusual level [more than 3,727 kPa (38 kg/cm^2 , 540 psi)], the release port on the pressure relief valve automatically opens and releases refrigerant into the atmosphere.

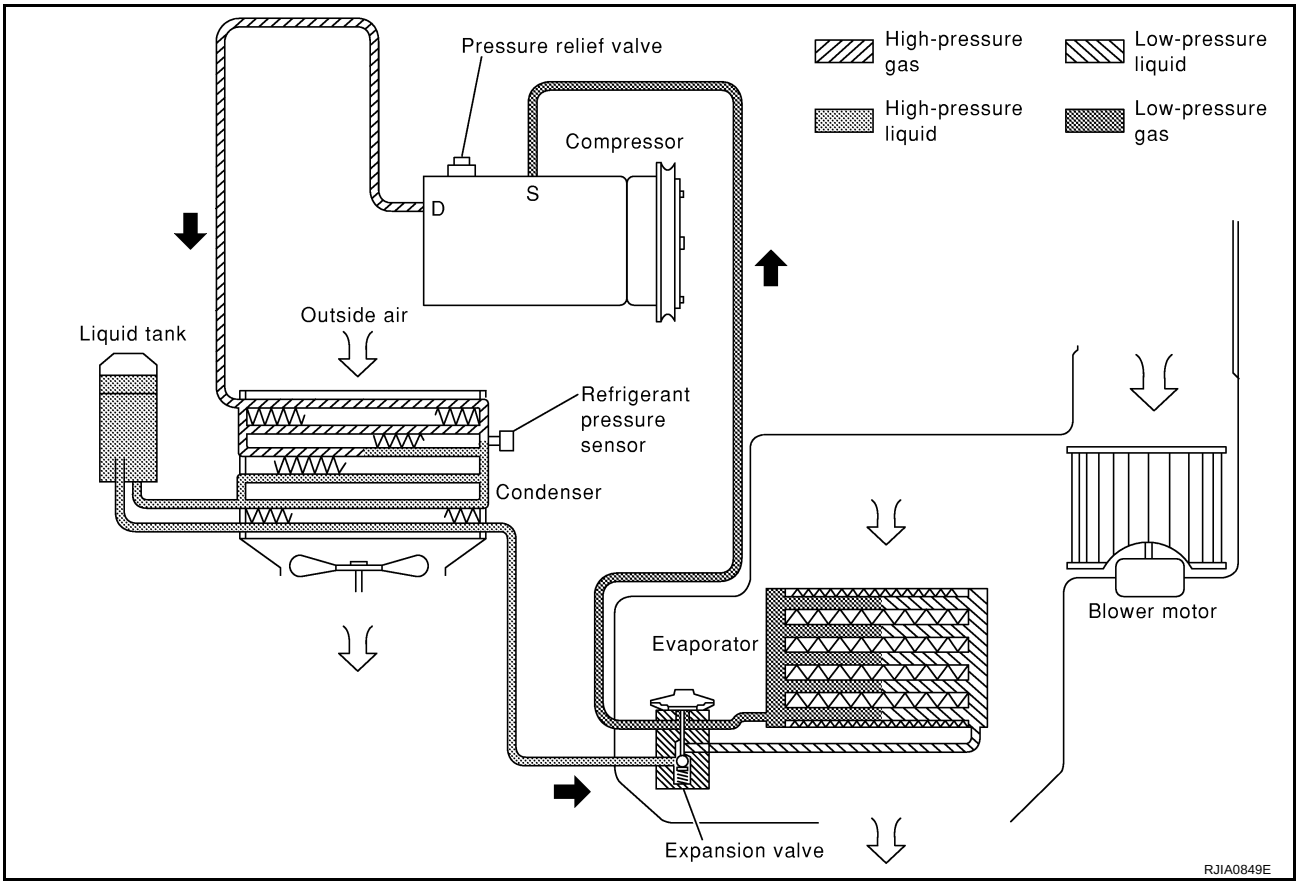

V-6 Variable Displacement Compressor

AJS001BE

GENERAL INFORMATION

1. The V-6 variable compressor differs from previous units. The vent temperatures of the V-6 variable compressor do not drop too far below 5°C (41°F) when:
   Evaporator intake air temperature is less than 20°C (68°F).
   Engine is running at speeds less than 1,500 rpm.
   This is because the V-6 compressor provides a means of “capacity” control.
2. The V-6 variable compressor provides refrigerant control under varying conditions. During cold winters, it may not produce high refrigerant pressure discharge (compared to previous units) when used with air conditioning systems.
3. A “clanking” sound may occasionally be heard during refrigerant charge. The sound indicates that the tilt angle of the wobble (swash) plate has changed and is not a malfunction.
4. For air conditioning systems with the V-6 compressor, the clutch remains engaged unless: the system main switch, fan switch or ignition switch is turned OFF. When ambient (outside) temperatures are low or when the amount of refrigerant is insufficient, the clutch is disengaged to protect the compressor.

DESCRIPTION

General

The variable compressor is basically a swash plate type that changes piston stroke in response to the required cooling capacity.

The tilt of the wobble (swash) plate allows the piston's stroke to change so that refrigerant discharge can be continuously changed from 14.5 to 184 cm^3 (0.885 to 11.228 cu. in).

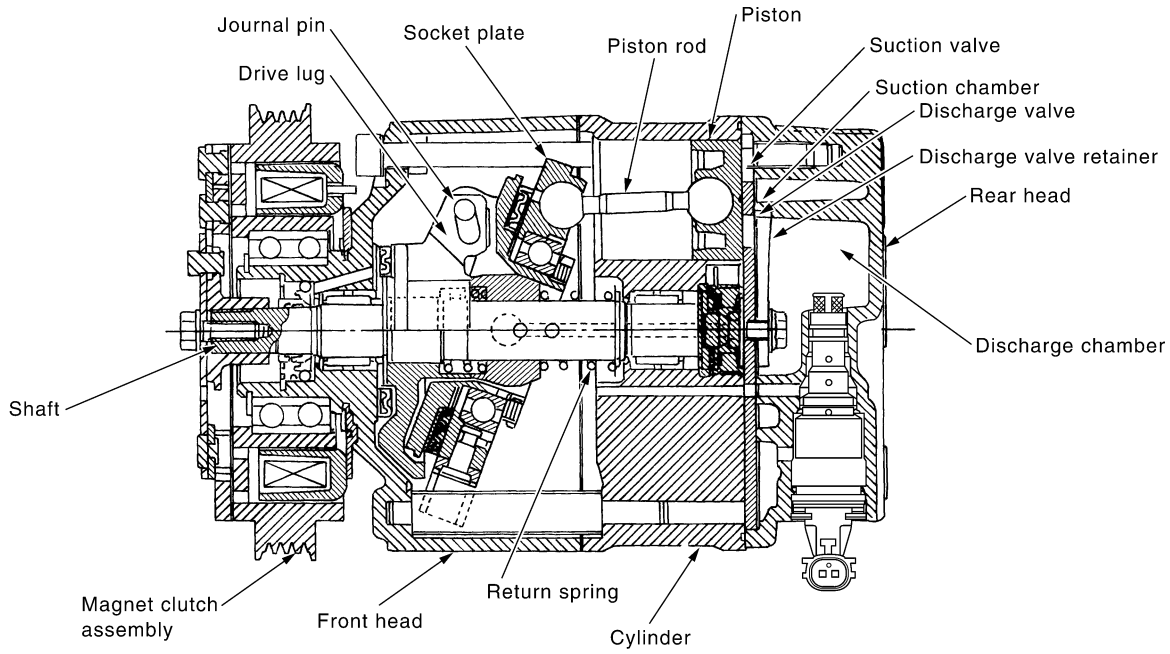

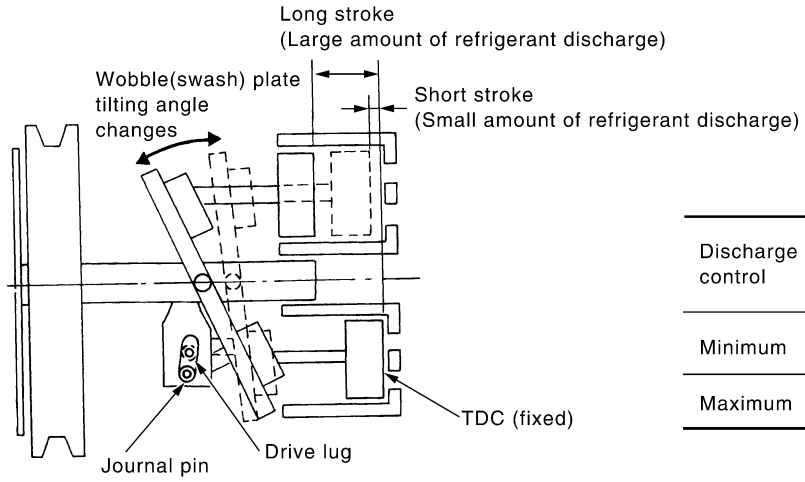

Discharge control	Discharge capacity cm^3 (cu in)/rev.	Piston stroke length mm (in)
Minimum	14.5 (0.885)	2.3 (0.091)
Maximum	184 (11.228)	28.6 (1.126)

RJIA1260E

Operation

1. Control Valve

– By changing high-pressure valve lift amount, built-in compressor control valve executes the following:

- Controls high-pressure valve discharge amount.
- Changes crankcase pressure in compressor.
- Changes angle of wobble (swash) plate.

– Amount of high-pressure valve lift is determined by factors below.

- Low-pressure applied to diaphragm
- Spring load of set spring
- Balance of magnetic force generated by magnet coil

– Electronic control valve (ECV) magnet coil receives electric signal (duty control) from unified meter and A/C amp. (Auto amp.) Then, magnetic force generated by electric current is changed to control high-pressure valve lift amount.

2. Maximum Cooling
High-pressure valve is closed by magnetic force generated by electric signal sent from unified meter and A/C amp. At this time, cylinder moves full stroke due to pressure balance between inside crankcase (Pc) and suction line (Ps).
Under this condition, the wobble (swash) plate is set to the maximum stroke position.

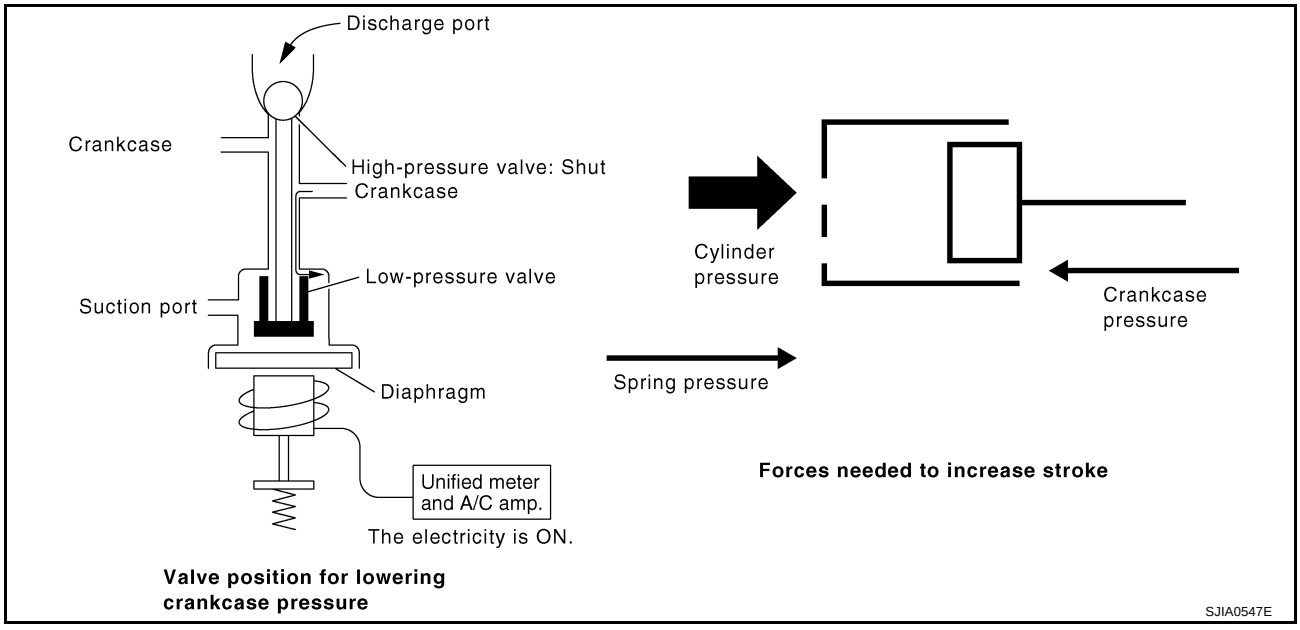

3. Capacity Control
When no electric signal is sent from unified meter and A/C amp. (current: OFF), high-pressure valve is opened by spring force.
Since suction pressure is low, it makes the suction port close and the discharge port open. Thus, crankcase pressure becomes high as high-pressure enters the crankcase.

– The force acts around the journal pin near the wobble (swash) plate, and is generated by the pressure difference before and behind the piston.

– The drive lug and journal pin are located where the piston generates the highest pressure. Piston pressure is between suction pressure Ps and discharge pressure Pd, which is close to suction pressure Ps. If crankcase pressure Pc rises due to capacity control, the force around the journal pin makes the wobble (swash) plate angle decrease and also the piston stroke decrease. In other words, crankcase pressure

increase triggers pressure difference between the piston and the crankcase. The pressure difference changes the angle of the wobble (swash) plate.

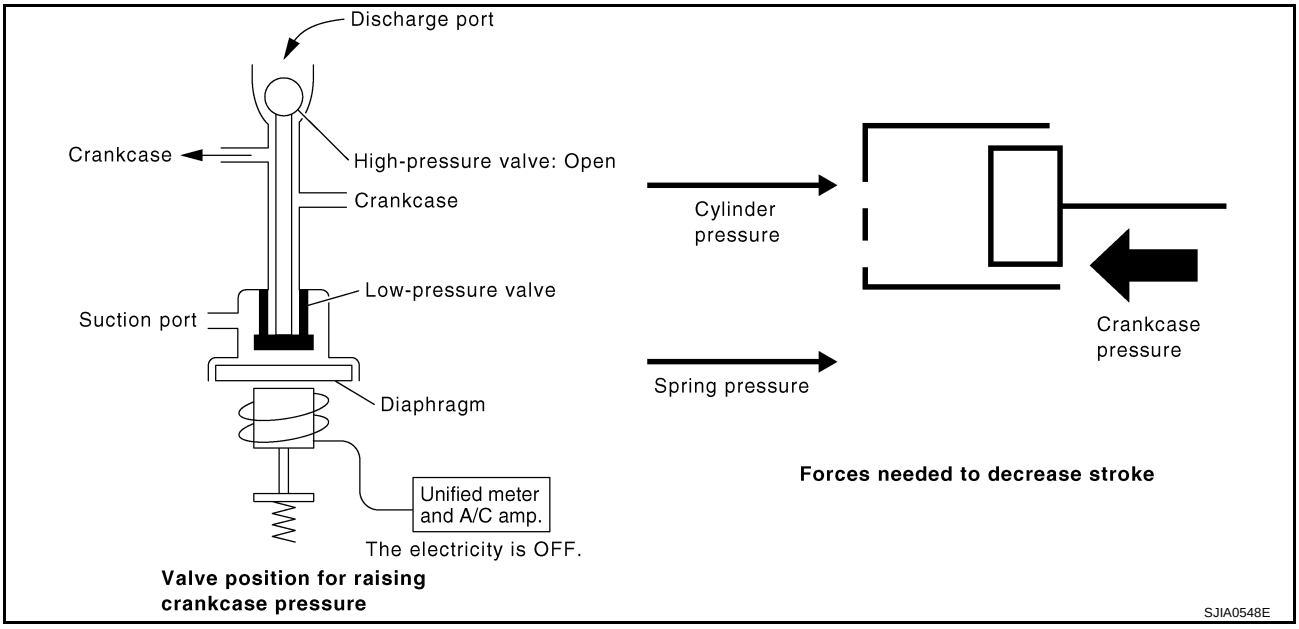

Component Layout

AJS00148

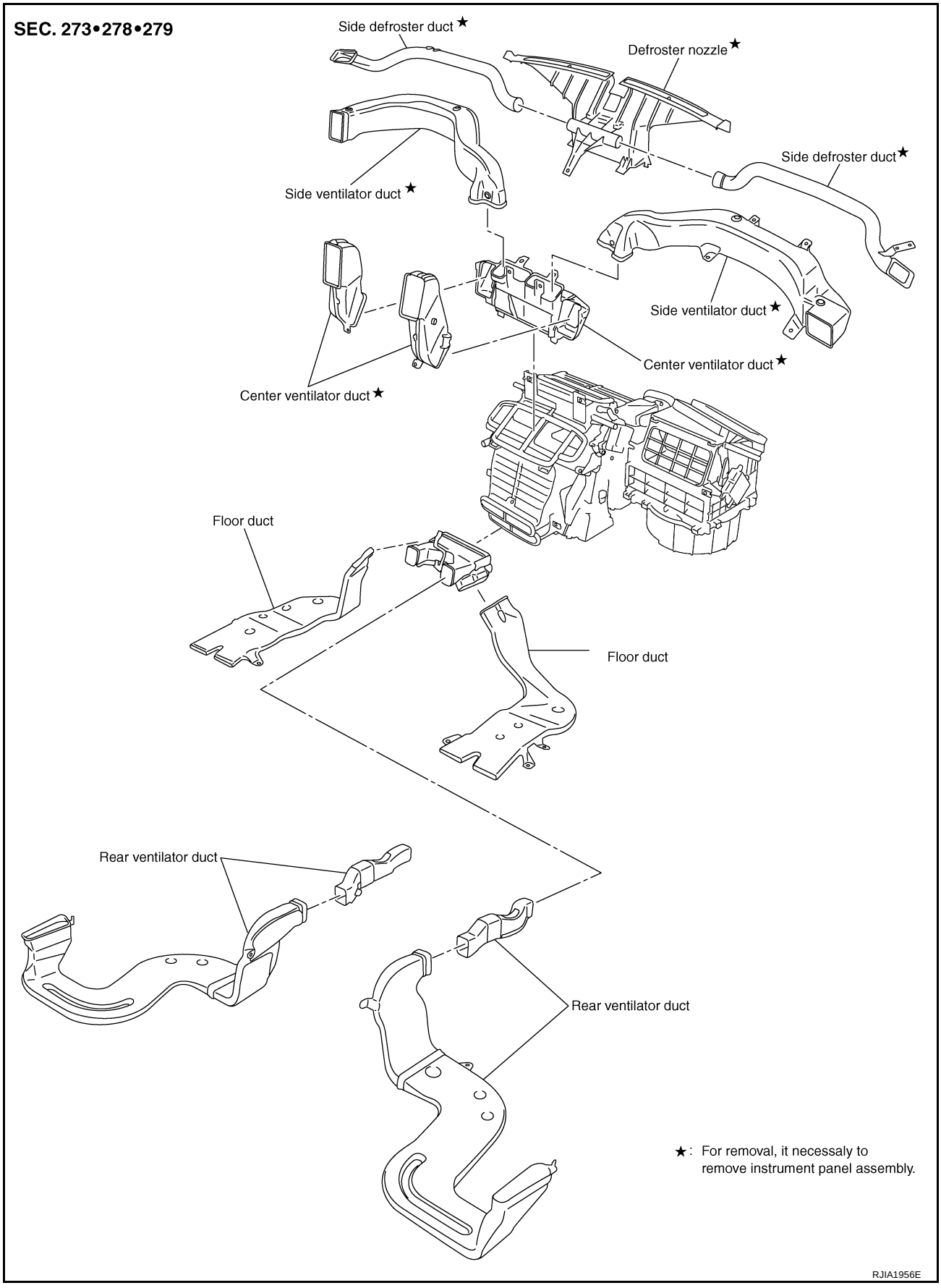

LUBRICANT

PFP:KLG00

Maintenance of Lubricant Quantity in Compressor

AJS00149

The lubricant in the compressor circulates through the system with the refrigerant. Add lubricant to compressor when replacing any component or after a large refrigerant leakage occurred. It is important to maintain the specified amount.
If lubricant quantity is not maintained properly, the following malfunctions may result:

- Lack of lubricant: May lead to a seized compressor.
- Excessive lubricant: Inadequate cooling (thermal exchange interference)

LUBRICANT

Name	**: NISSAN A/C System Oil Type S**
Part number	**: KLH00-PAGS0**

LUBRICANT RETURN OPERATION

Adjust the lubricant quantity according to the test group shown below.

1. CHECK LUBRICANT RETURN OPERATION

Can lubricant return operation be performed?

- A/C system works properly.
- There is no evidence of a large amount of lubricant leakage.

CAUTION:
If excessive lubricant leakage is noted, never perform the lubricant return operation.

OK or NG

OK >> GO TO 2.
NG >> GO TO 3.

2. PERFORM LUBRICANT RETURN OPERATION, PROCEEDING AS FOLLOWS

1. Start engine, and set the following conditions:
   - Engine speed: Idling to 1,200 rpm
   - A/C switch: ON
   - Blower speed: Max. position
   - Temp. control: Optional [Set so that intake air temperature is 25 to 30°C (77 to 86°F).]
   - Intake position: Recirculation (REC)
2. Perform lubricant return operation for about 10 minutes.
3. Stop engine.

>> GO TO 3.

3. CHECK REPLACEMENT PART

Should the compressor be replaced?

YES >> GO TO ATC-29, "LUBRICANT ADJUSTING PROCEDURE FOR COMPRESSOR REPLACEMENT" .
NO >> GO TO ATC-28, "LUBRICANT ADJUSTING PROCEDURE FOR COMPONENTS REPLACEMENT EXCEPT COMPRESSOR" .

LUBRICANT ADJUSTING PROCEDURE FOR COMPONENTS REPLACEMENT EXCEPT COMPRESSOR

After replacing any of the following major components, add the correct amount of lubricant to the system.
Amount of lubricant to be added

Part replaced	Lubricant to be added to system	Remarks
	Amount of lubricant m ℓ (US fl oz., Imp fl oz.)	
Evaporator	75 (2.5, 2.6)	—
Condenser	35 (1.2, 1.2)	—
Liquid tank	10 (0.3, 0.4)	—
In case of refrigerant leak	30 (1.0, 1.1)	Large leak
	—	Small leak *1

*1: If refrigerant leak is small, no addition of lubricant is needed.

LUBRICANT ADJUSTING PROCEDURE FOR COMPRESSOR REPLACEMENT

1. Before connecting recovery/recycling recharging equipment to vehicle, check recovery/recycling recharging equipment gauges. No refrigerant pressure should be displayed. If NG, recover refrigerant from equipment lines.
2. Connect recovery/recycling recharging equipment to vehicle. Confirm refrigerant purity in supply tank using recovery/recycling recharging equipment and refrigerant identifier. If NG, refer to ATC-7, "CONTAMINATED REFRIGERANT" .
3. Confirm refrigerant purity in vehicle A/C system using recovery/recycling recharging equipment and refrigerant identifier. If NG, refer to ATC-7, "CONTAMINATED REFRIGERANT" .
4. Discharge refrigerant into the refrigerant recovery/recycling equipment. Measure lubricant discharged into the recovery/recycling equipment.
5. Drain the lubricant from the old (removed) compressor into a graduated container and recover the amount of lubricant drained.
6. Drain the lubricant from the new compressor into a separate, clean container.
7. Measure an amount of new lubricant installed equal to amount drained from old compressor. Add this lubricant to new compressor through the suction port opening.
8. Measure an amount of new lubricant equal to the amount recovered during discharging. Add this lubricant to new compressor through the suction port opening.
9. If the liquid tank also needs to be replaced, add another 5 mℓ (0.2 US fl oz., 0.2 Imp fl oz.) of lubricant at this time.
   Do not add this 5 mℓ (0.2 US fl oz., 0.2 Imp fl oz.) of lubricant if only replacing the compressor.

Lubricant adjusting procedure for compressor replacement

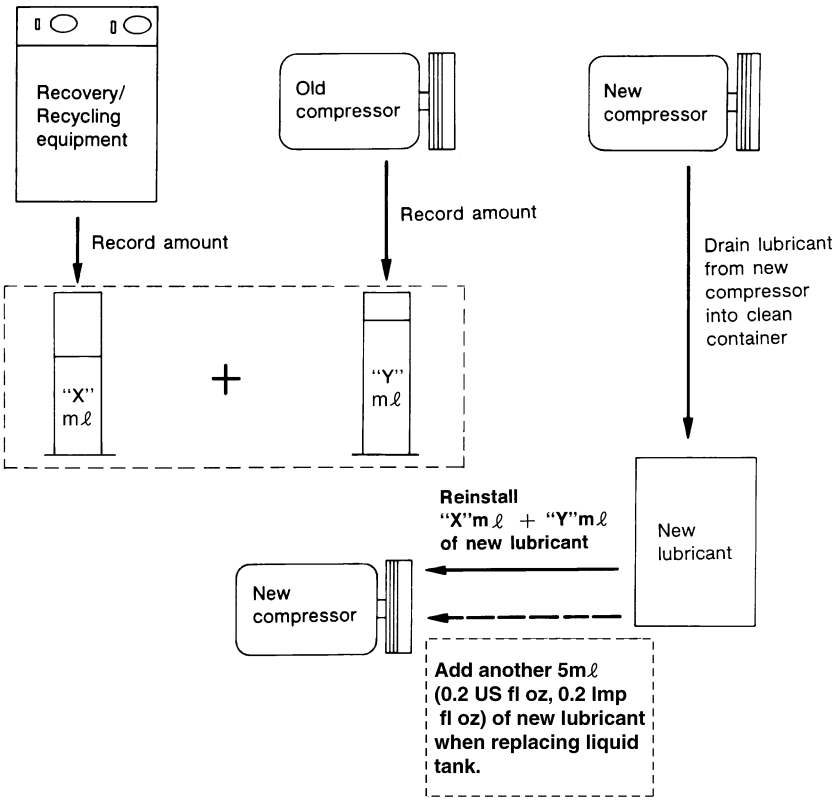

RJIA3578E

AIR CONDITIONER CONTROL

PFP:27500

Description of Air Conditioner LAN Control System

AJS0014A

The LAN (Local Area Network) system consists of unified meter and A/C amp., mode door motor, air mix door motor and intake door motor.
A configuration of these components is shown in the diagram below.

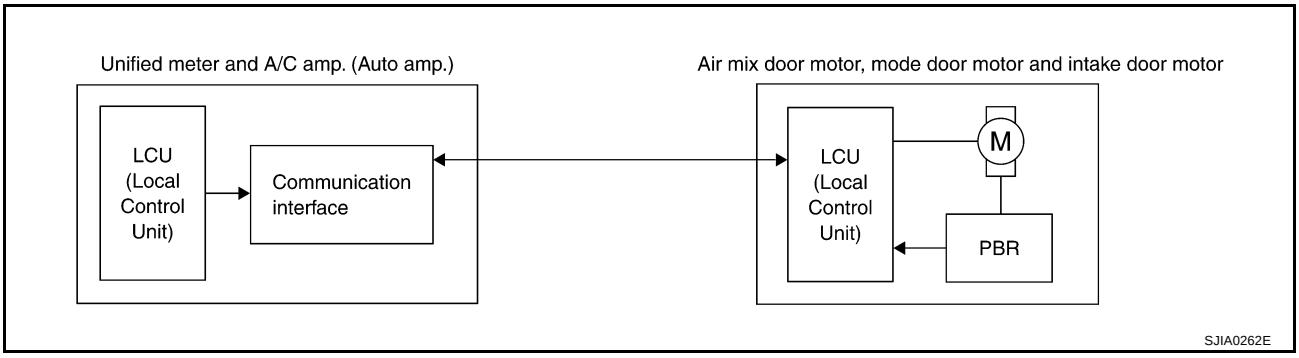

System Construction

AJS0014B

A small network is constructed between the unified meter and A/C amp., air mix door motor, mode door motor and intake door motor. The unified meter and A/C amp. and motors are connected by data transmission lines and motor power supply lines. The LAN network is built through the ground circuits of each door motor.
Addresses, motor opening angle signals, motor stop signals and error checking messages are all transmitted through the data transmission lines connecting the unified meter and A/C amp. and each door motor.
The following functions are contained in LCUs built into the air mix door motor, the mode door motor and the intake door motor.

- Address
- Motor opening angle signals
- Data transmission
- Motor stop and drive decision
- Opening angle sensor (PBR function)
- Comparison
- Decision (Unified meter and A/C amp. indicated value and motor opening angle comparison)

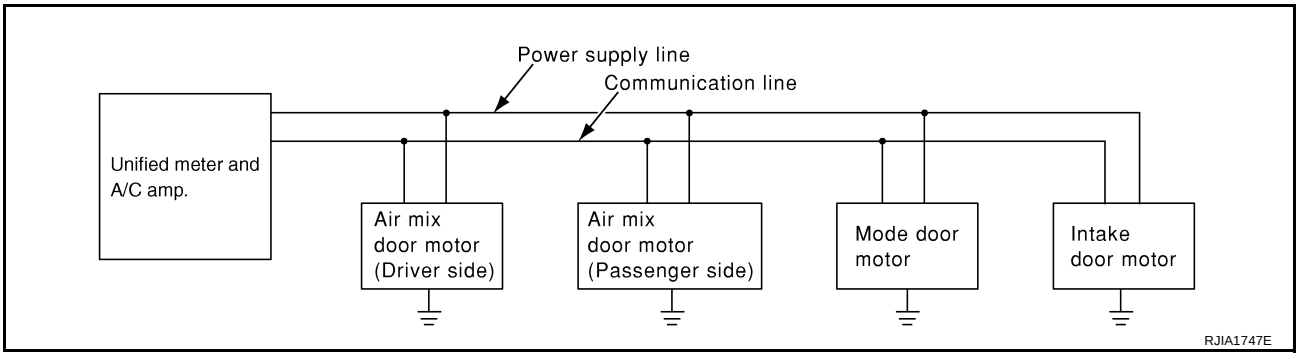

OPERATION

The unified meter and A/C amp. receives data from each of the sensors. The unified meter and A/C amp. sends mode door, air mix door and intake door opening angle data to the mode door motor LCU, air mix door motor LCU and intake door motor LCU.
The mode door motor, air mix door motor and intake door motor read their respective signals according to the address signal. Opening angle indication signals received from the unified meter and A/C amp. and each of the motor position sensors is compared by the LCUs in each motor with the existing decision and opening angles. Subsequently, HOT/COLD, DEF/VENT and FRESH/RECIRCULATION operation is selected. The new selection data is returned to the unified meter and A/C amp.

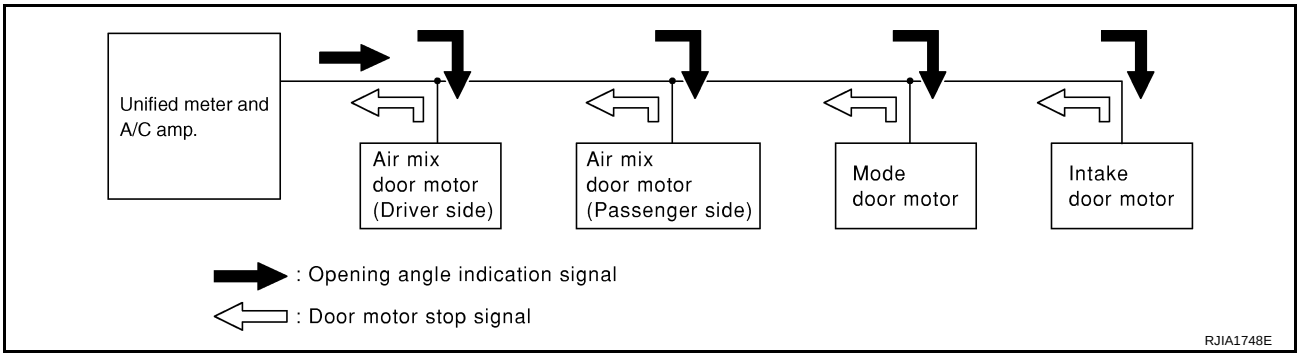

TRANSMISSION DATA AND TRANSMISSION ORDER

Unified meter and A/C amp. data is transmitted consecutively to each of the door motors following the form shown in figure below.

Start:

Initial compulsory signal sent to each of the door motors.

Address:

Data sent from the unified meter and A/C amp. are selected according to data-based decisions made by the air mix door motor, mode door motor and intake door motor.
If the addresses are identical, the opening angle data and error check signals are received by the door motor LCUs. The LCUs then make the appropriate error decision. If the opening angle data have no error, door control begins.
If an error exists, the received data are rejected and corrected data received. Finally, door control is based upon the corrected opening angle data.

Opening Angle:

Data that shows the indicated door opening angle of each door motor.

Error Check:

Procedure by which sent and received data is checked for errors. Error data are then compiled. The error check prevents corrupted data from being used by the air mix door motor, the mode door motor and the intake door motor. Error data can be related to the following symptoms.

- Malfunction of electrical frequency
- Poor electrical connections
- Signal leakage from transmission lines
- Signal level fluctuation

Stop Signal:

At the end of each transmission, a stop operation, in-operation, or internal malfunction message is delivered to the unified meter and A/C amp. This completes one data transmission and control cycle.

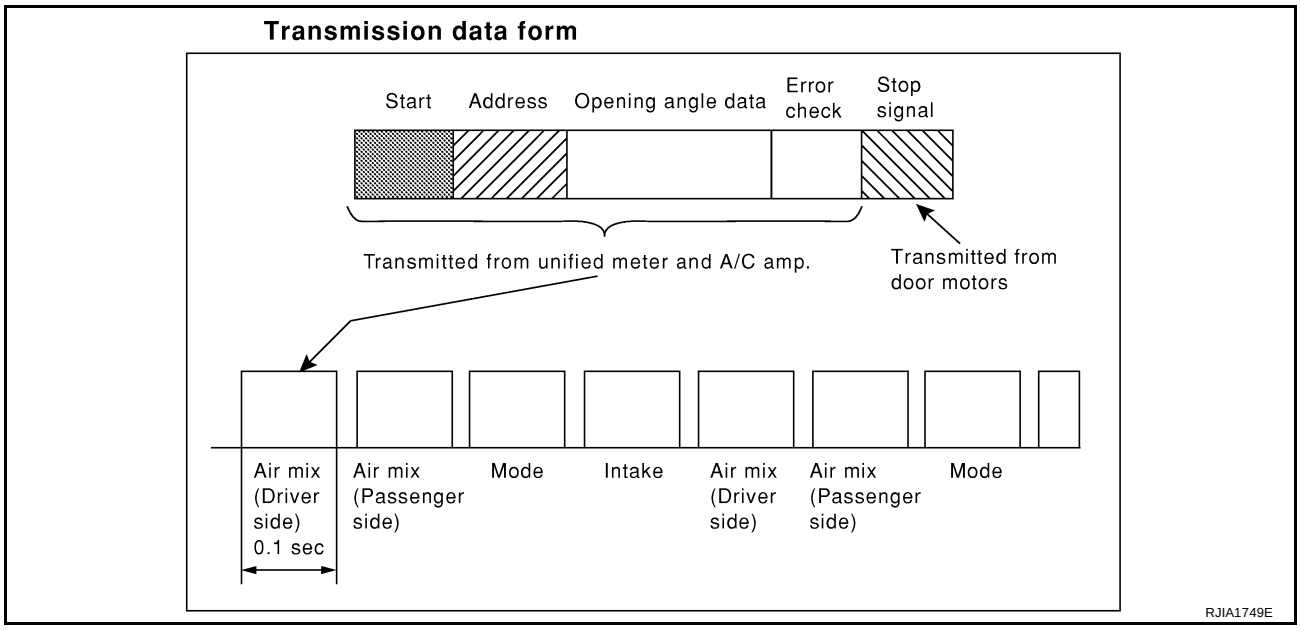

AIR MIX DOOR CONTROL (AUTOMATIC TEMPERATURE CONTROL)

The air mix door is automatically controlled so that in-vehicle temperature is maintained at a predetermined value by the temperature setting, ambient temperature, in-vehicle temperature and amount of sunload.

FAN SPEED CONTROL

Blower speed is automatically controlled by the temperature setting, ambient temperature, in-vehicle temperature, intake temperature, amount of sunload and air mix door position.
With pressing AUTO switch, the blower motor starts to gradually increase air flow volume.
When engine coolant temperature is low, the blower motor operation is delayed to prevent cool air from flowing.

INTAKE DOOR CONTROL

The intake doors are automatically controlled by the temperature setting, ambient temperature, in-vehicle temperature, intake temperature, amount of sunload and ON-OFF operation of the compressor.

OUTLET DOOR CONTROL

The outlet door is automatically controlled by the temperature setting, ambient temperature, in-vehicle temperature, intake temperature and amount of sunload.

MAGNET CLUTCH CONTROL

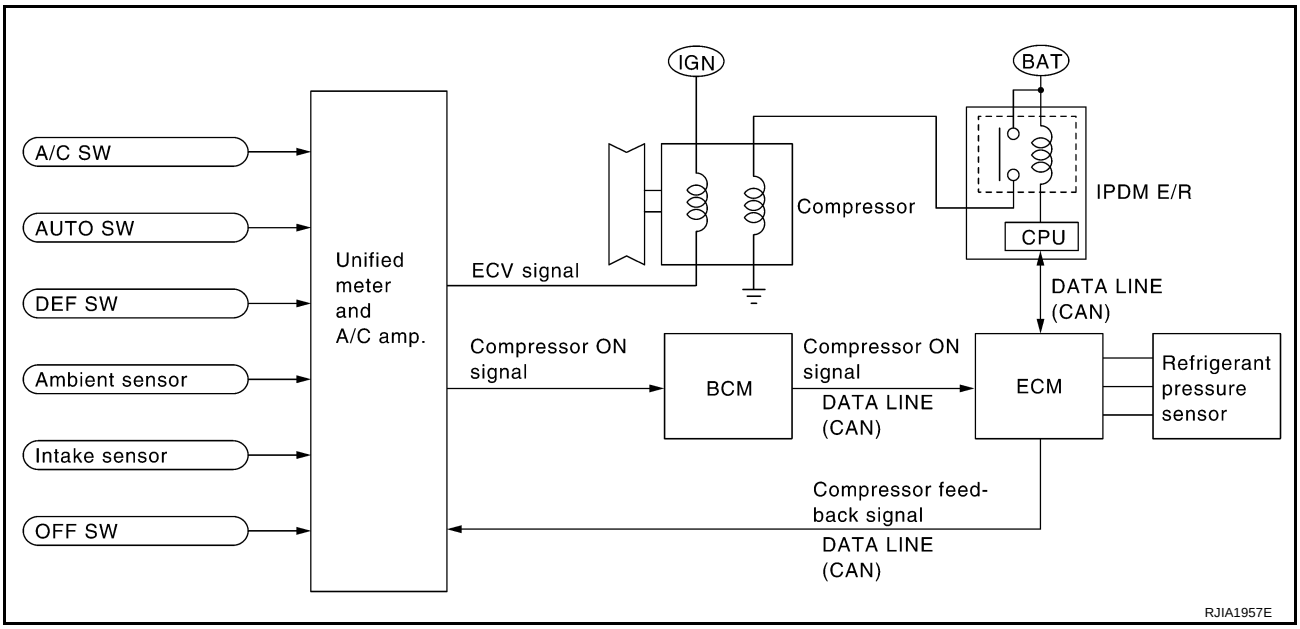

When A/C switch or DEF switch is pressed, unified meter and A/C amp. inputs compressor ON signal to BCM. BCM sends compressor ON signal to ECM, via CAN communication line.
ECM judges whether compressor can be turned ON, based on each sensor status (refrigerant-pressure sensor signal, throttle angle, etc.). If it judges compressor can be turned ON, it sends compressor ON signal to IPDM E/R, via CAN communication line.
Upon receipt of compressor ON signal from ECM, IPDM E/R turns air conditioner relay ON to operate compressor.
When sending compressor ON signal to IPDM E/R via CAN communication line, ECM simultaneously sends compressor feedback signal to unified meter and A/C amp. via CAN communication line.
Unified meter and A/C amp., then, uses input compressor feedback signal to control air inlet.

SELF-DIAGNOSIS SYSTEM

The self-diagnosis system is built into the unified meter and A/C amp. to quickly locate the cause of symptoms.

Description of Control System

AJS0014C

The control system consists of input sensors, switches, the unified meter and A/C amp. (microcomputer) and outputs. The relationship of these components is shown in the figure below:

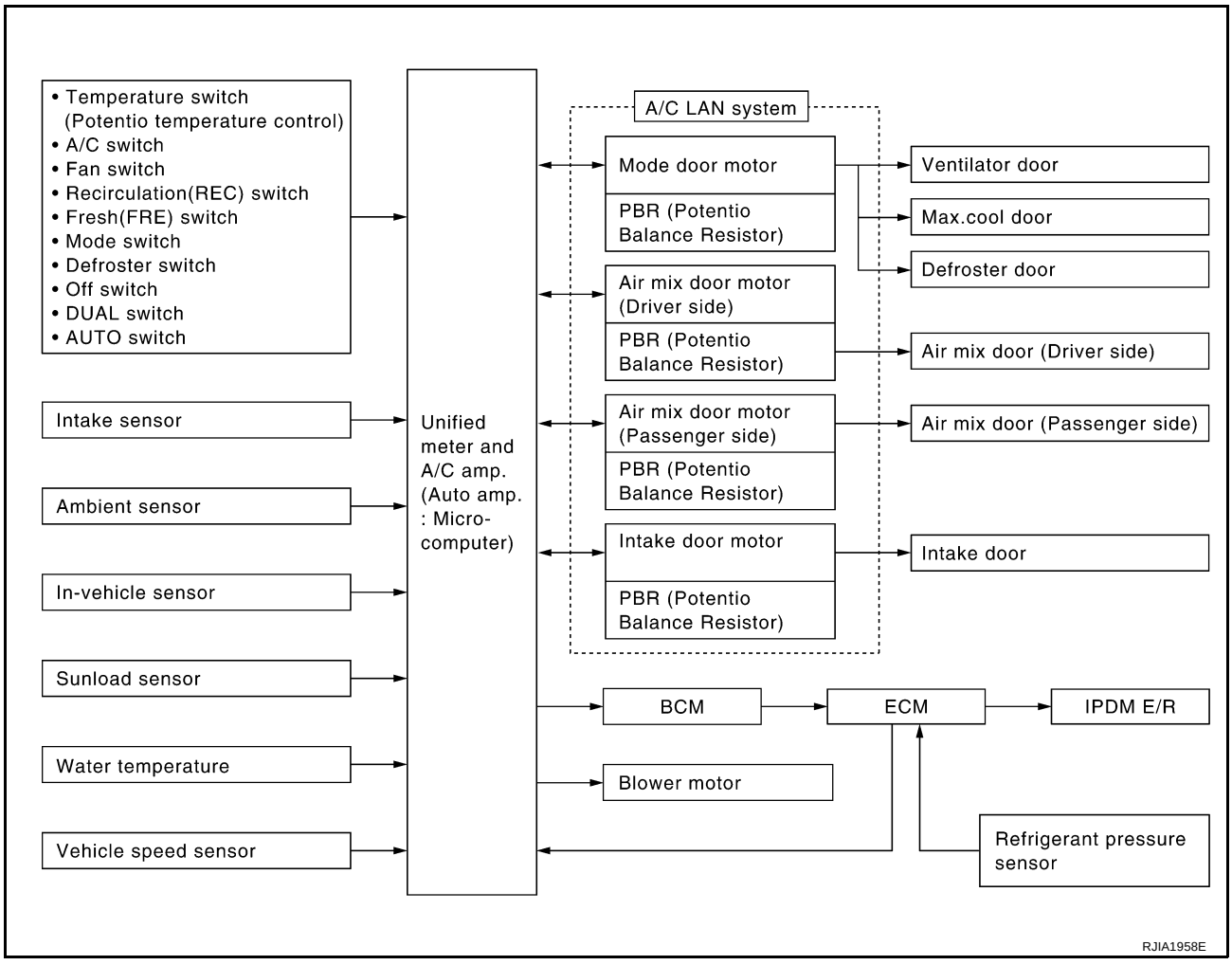

Control Operation

AJS0014D

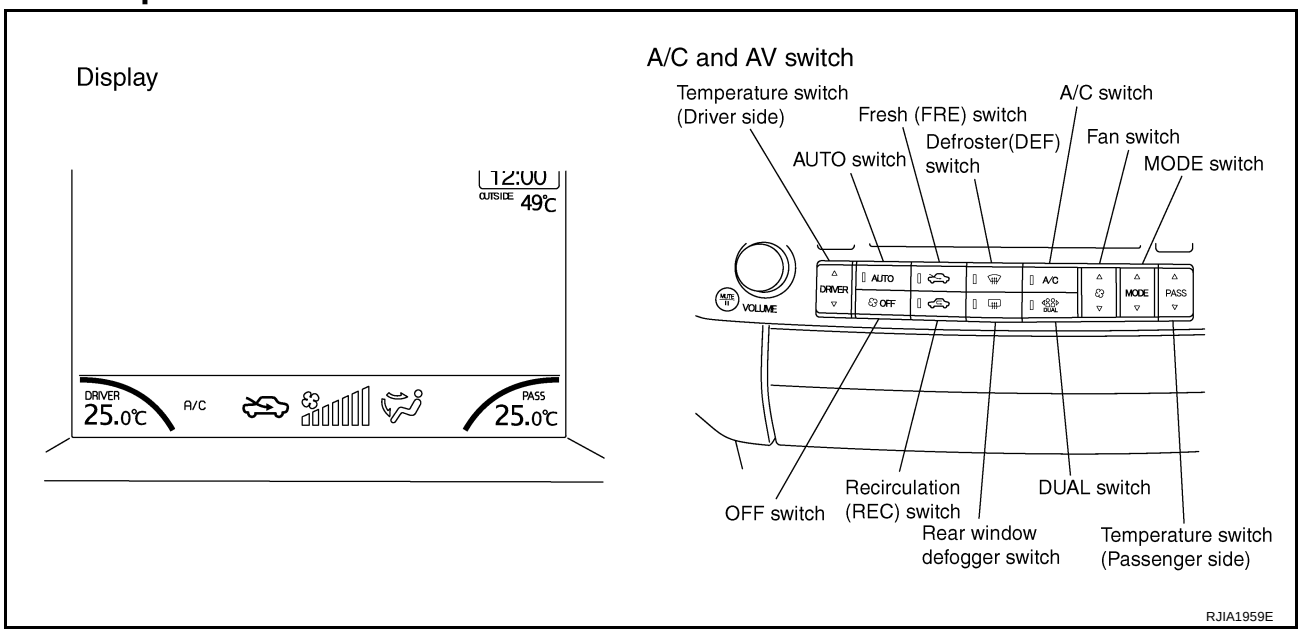

DISPLAY SCREEN

Displays the operational status of the system.

AUTO SWITCH

- The compressor, intake doors, air mix doors, mode doors and blower speed are automatically controlled so that the in-vehicle temperature will reach, and be maintained at the set temperature selected by the operator.
- When pressing AUTO switch, air inlet, air outlet, fan speed, and discharge air temperature are automatically controlled.

TEMPERATURE SWITCH (POTENTIO TEMPERATURE CONTROL) (DRIVER SIDE)

The set temperature is increased or decreased with this dial.

TEMPERATURE SWITCH (POTENTIO TEMPERATURE CONTROL) (PASSENGER SIDE)

- The set temperature is increased or decreased with this dial.
- When the temperature switch is pressed, the dual switch indicator will automatically illuminate.

RECIRCULATION (REC) SWITCH

- When REC switch is ON, REC switch indicator turns ON, and air inlet is fixed to REC.
- When REC switch is ON and is pressed for approximately 1.5 seconds or longer, REC and FRE switch indicators blink twice. Then, automatic control mode is entered. Inlet status is displayed even during automatically controlled.
- When FRE switch is turned ON, or when compressor is turned from ON to OFF, REC switch is automatically turned OFF (fixed to FRE mode). REC mode can be re-entered by pressing REC switch again.
- REC switch is not operated when DEF switch is turned ON, or at the D/F position.

FRESH (FRE) SWITCH

- When FRE switch is ON, FRE switch indicator turns ON, and air inlet is fixed to FRE.
- When FRE switch is ON and is pressed for approximately 1.5 seconds or longer, REC and FRE switch indicators blink twice. Then, automatic control mode is entered. Inlet status is displayed even during automatically controlled.
- When REC switch is turned ON, FRE switch is automatically turned OFF (fixed to REC mode). FRE mode can be re-entered by pressing FRE switch again.

DEFROSTER (DEF) SWITCH

Mode doors are set to the defrost position with this switch. Also, intake doors are set to the outside air position, and compressor turns ON.

REAR WINDOW DEFOGGER SWITCH

When illumination is ON, rear window is defogged.

OFF SWITCH

Compressor and blower are OFF, the intake doors are set to the outside air position, and the mode doors are set to the foot (75% foot and 25% defrost) position.

A/C SWITCH

Compressor is ON or OFF.
(Pressing the A/C switch when the AUTO switch is ON will turn off the A/C switch and compressor.)

MODE SWITCH

The air discharge outlets is controlled by this switch.

FAN SWITCH

The blower speed is manually controlled with this switch. Seven speeds are available for manual control (as shown on the display screen).

DUAL SWITCH (WITH LEFT AND RIGHT VENTILATION TEMPERATURE SEPARATELY CONTROL SYSTEM)

- When the DUAL switch indicator is illuminated, the driver-side outlet and passenger-side outlet, as well as the setting temperature, can each be set independently.
- When the DUAL switch indicator is not illuminated, the driver-side outlet and setting temperature is applied to both sides.

Fail-safe Function

AJS0014E

- If a communication error exists between unified meter and A/C amp. and A/C and AV switch for 30 seconds or longer, air conditioner is controlled under following conditions:
  - Compressor: ON
  - Air outlet: AUTO
  - Air inlet: FRE (Fresh)
  - Blower fan speed: AUTO
  - Set temperature: Setting before communication error occurs

Discharge Air Flow

AJS0014F

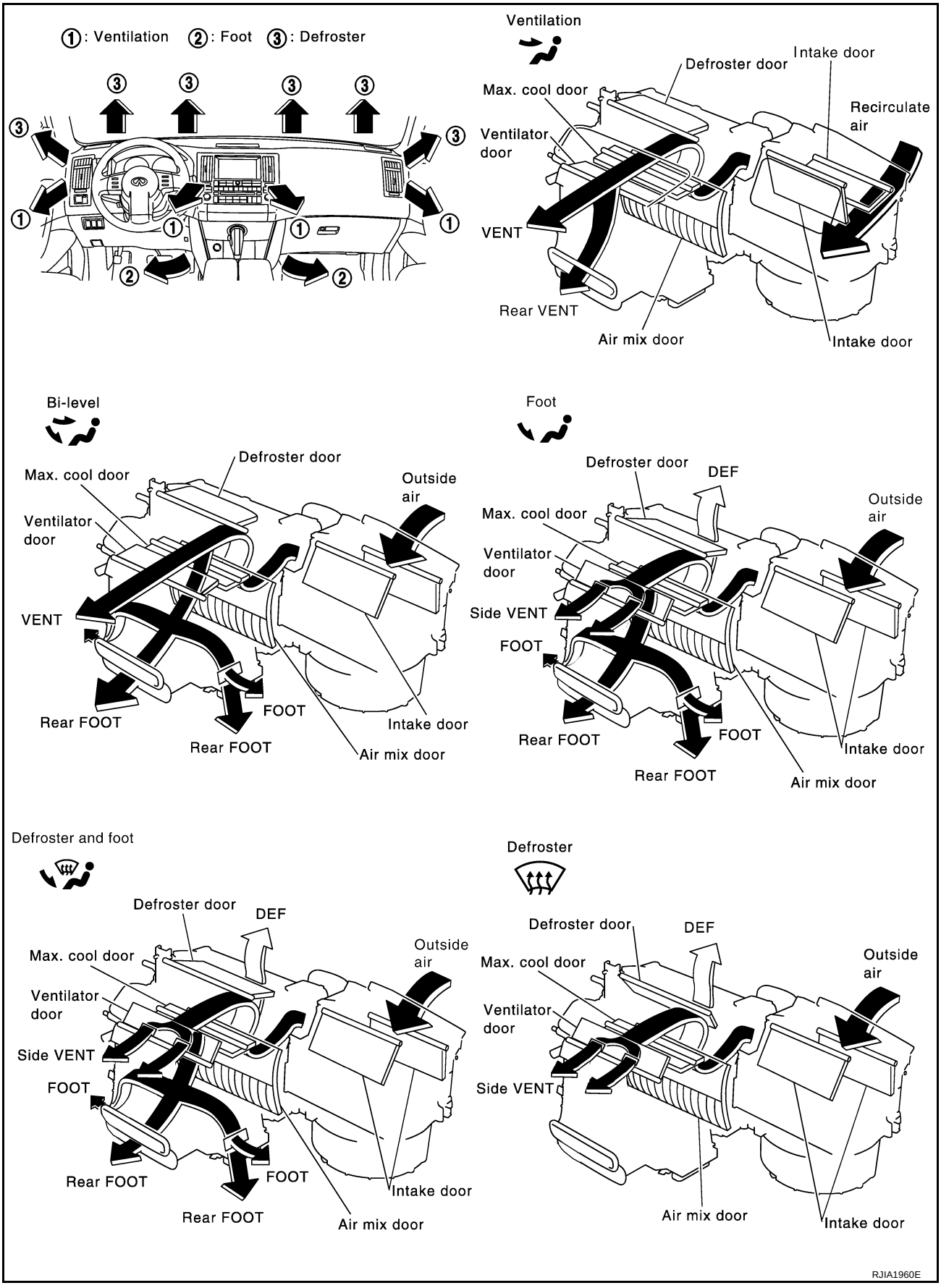

System Description

AJS0014G

SWITCHES AND THEIR CONTROL FUNCTION

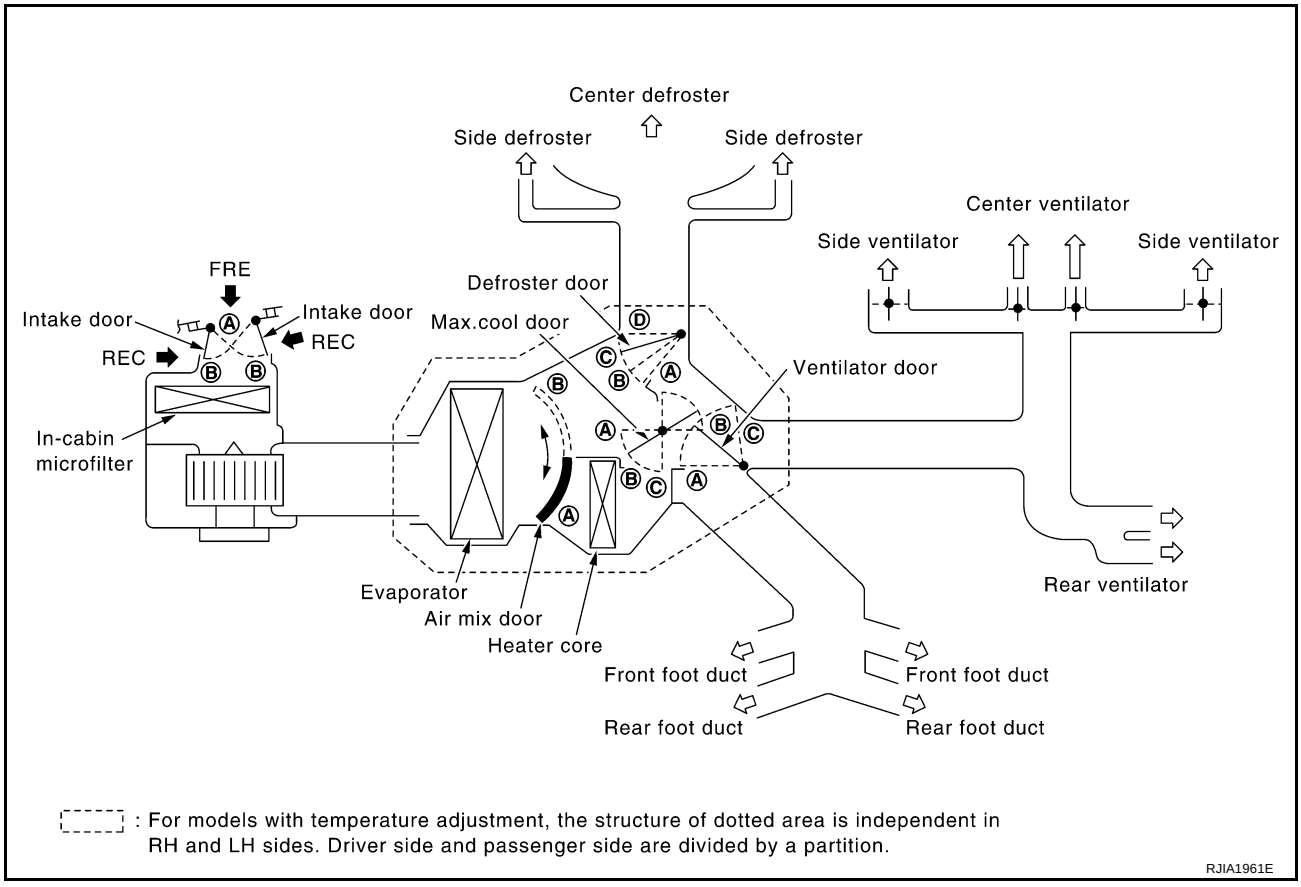

Position or switch / Door	MODE SW				DEF SW		AUTO SW	REC SW	FRE SW	Temperature switch			OFF SW
	VENT	B/L	FOOT	D/F	ON	OFF				DRIVER	PASSENGER		
					FRONT		AUTO			18°C (60°F)	~	32°C (90°F)	OFF
Ventilator door	Ⓐ	Ⓑ	Ⓒ	Ⓒ	Ⓒ	—	AUTO	—		—			Ⓒ
Max.cool door	Ⓐ	Ⓑ	Ⓑ	Ⓑ	Ⓒ			—		—			Ⓑ
Defroster door	Ⓓ	Ⓓ	Ⓓ or Ⓒ *1	Ⓑ	Ⓐ			—		—			Ⓒ
Intake door	—			Ⓑ	Ⓑ		AUTO	Ⓐ *2	Ⓑ *2	—			Ⓑ
Air mix door	—				—		AUTO	—		Ⓐ	AUTO	Ⓑ	—

*1: This position is selected only when the mode door is automatically controlled.
*2: Inlet status is displayed even during automatic control.

RJIA1962E

CAN Communication System Description

AJS0014H

CAN (Controller Area Network) is a serial communication line for real time application. It is an on-vehicle multiplex communication line with high data communication speed and excellent error detection ability. Many electronic control units are equipped onto a vehicle, and each control unit shares information and links with other control units during operation (not independent). In CAN communication, control units are connected with 2 communication lines (CAN-H line, CAN-L line) allowing a high rate of information transmission with less wiring. Each control unit transmits/receives data but selectively reads required data only. For details, refer to LAN-30, "CAN Communication Unit" .

TROUBLE DIAGNOSIS

PFP:00004

CONSULT-II Function (BCM)

AJS0014J

CONSULT-II can display each diagnosis item using the diagnosis test modes shown following.

System part	Check item, diagnosis mode	Description
BCM	Data monitor	Displays BCM input data in real time.

CONSULT-II BASIC OPERATION

CAUTION:

If CONSULT-II is used with no connection of CONSULT-II CONVERTER, malfunctions might be detected in self-diagnosis depending on control unit which carry out CAN communication.

1. With the ignition switch OFF, connect CONSULT-II and “CONSULT-II CONVERTER” to the data link connector, and then turn the ignition switch ON.

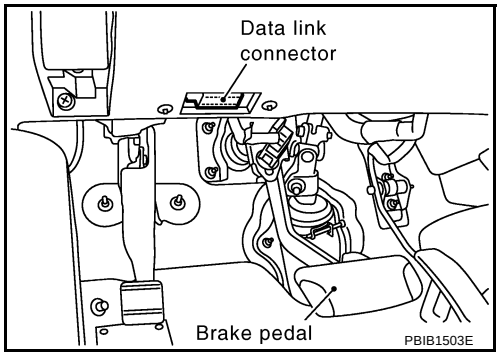

2. Touch “START (NISSAN BASED VHCL)”.

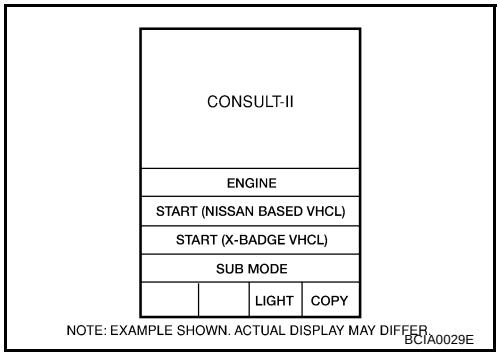

3. Touch “BCM” on “SELECT SYSTEM” screen. If “BCM” is not indicated, refer to GI-39, "CONSULT-II Data Link Connector (DLC) Circuit" .

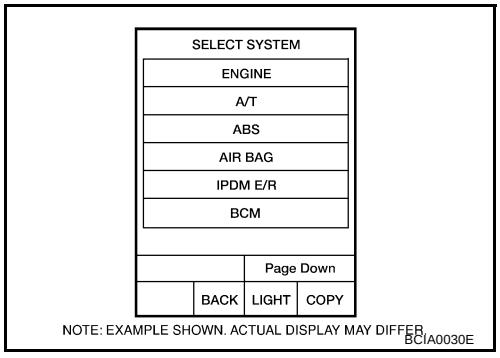

DATA MONITOR

Operation Procedure

1. Touch “AIR CONDITIONER” on “SELECT TEST ITEM” screen.

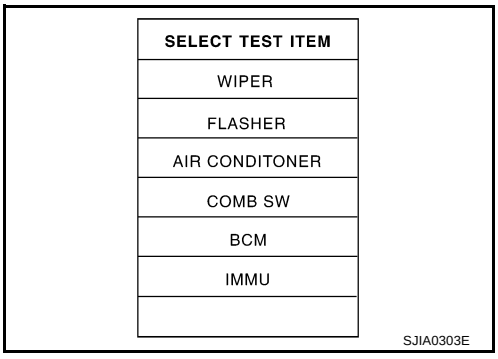

2. Touch “DATA MONITOR” on “SELECT DIAG MODE” screen.

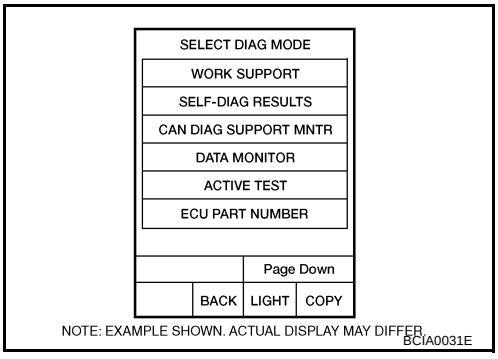

3. Touch either “ALL SIGNALS” or “SELECTION FROM MENU” on “DATA MONITOR” screen.

All signals	Monitors all the items.
Selection from menu	Selects and monitors the individual item selected.

4. When “SELECTION FROM MENU” is selected, touch items to be monitored. When “ALL SIGNALS” is selected, all the items will be monitored.
5. Touch “START”.
6. Touch “RECORD” while monitoring, then the status of the monitored item can be recorded. To stop recording, touch “STOP”.

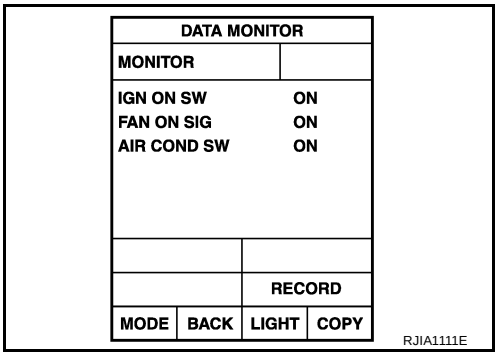

Display Item List

Monitor item name “operation or unit”		Contents
IGN ON SW	“ON/OFF”	Displays “IGN position (ON)/OFF, ACC position (OFF)” status as judged from ignition switch signal.
FAN ON SIG	“ON/OFF”	Displays “FAN (ON)/FAN (OFF)” status as judged from blower fan motor switch signal.
AIR COND SW	“ON/OFF”	Displays “COMP (ON)/COMP (OFF)” status as judged from air conditioner switch signal.

How to Perform Trouble Diagnosis for Quick and Accurate Repair

AJS0014K

WORK FLOW

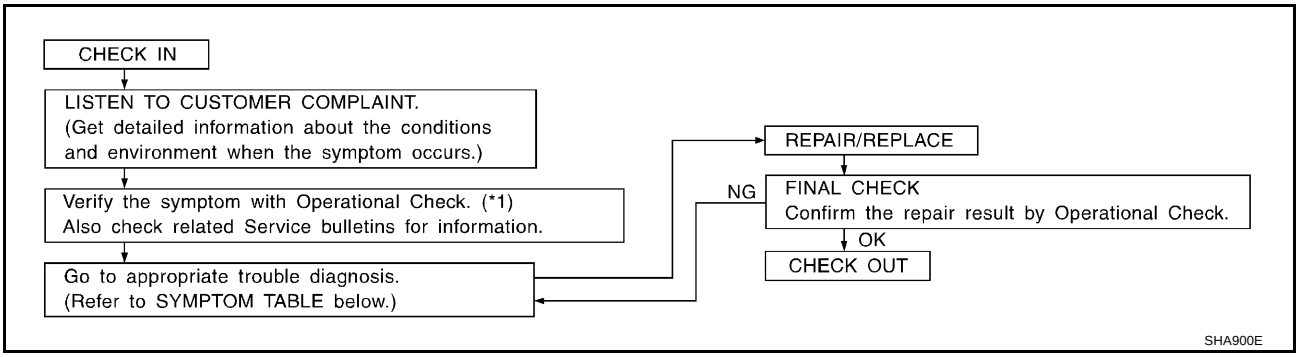

*1 ATC-61, "Operational Check"

SYMPTOM TABLE

Symptom	Reference Page	
A/C system does not come on.	Go to Trouble Diagnosis Procedure for A/C System.	ATC-63, "Power Supply and Ground Circuit for Auto Amp."
A/C system cannot be controlled.	● Go to Integrated Display System. ● Go to Navigation System.	AV-78, "Trouble Diagnosis Chart by Symptom" (Without navigation system) or AV-166, "A/C Screen Is Not Shown (NAVI Screen Is Shown)" (With navigation system)
Air outlet does not change.	Go to Trouble Diagnosis Procedure for Mode Door Motor. (LAN)	ATC-70, "Mode Door Motor Circuit"
Mode door motor does not operate normally.		
Discharge air temperature does not change.	Go to Trouble Diagnosis Procedure for Air Mix Door Motor. (LAN)	ATC-73, "Air Mix Door Motor Circuit"
Air mix door motor does not operate normally.		
Intake door does not change.	Go to Trouble Diagnosis Procedure for Intake Door Motor. (LAN)	ATC-76, "Intake Door Motor Circuit"
Intake door motor does not operate normally.		
Blower motor operation is malfunctioning.	Go to Trouble Diagnosis Procedure for Blower Motor.	ATC-79, "Blower Motor Circuit"
Magnet clutch does not engage.	Go to Trouble Diagnosis Procedure for Magnet Clutch.	ATC-84, "Magnet Clutch Circuit"
Insufficient cooling	Go to Trouble Diagnosis Procedure for Insufficient Cooling.	ATC-91, "Insufficient Cooling"
	Go to Diagnosis Procedure for Insufficient Cooling.	ATC-98, "DIAGNOSIS PROCEDURE FOR INSUFFICIENT COOLING"
Insufficient heating	Go to Trouble Diagnosis Procedure for Insufficient Heating.	ATC-100, "Insufficient Heating"
Noise	Go to Trouble Diagnosis Procedure for Noise.	ATC-101, "Noise"
Self-diagnosis cannot be performed.	Go to Trouble Diagnosis Procedure for Self-diagnosis.	ATC-102, "Self-diagnosis"
Memory function does not operate.	Go to Trouble Diagnosis Procedure for Memory Function.	ATC-103, "Memory Function"

Component Parts and Harness Connector Location

AJS0014L

ENGINE COMPARTMENT

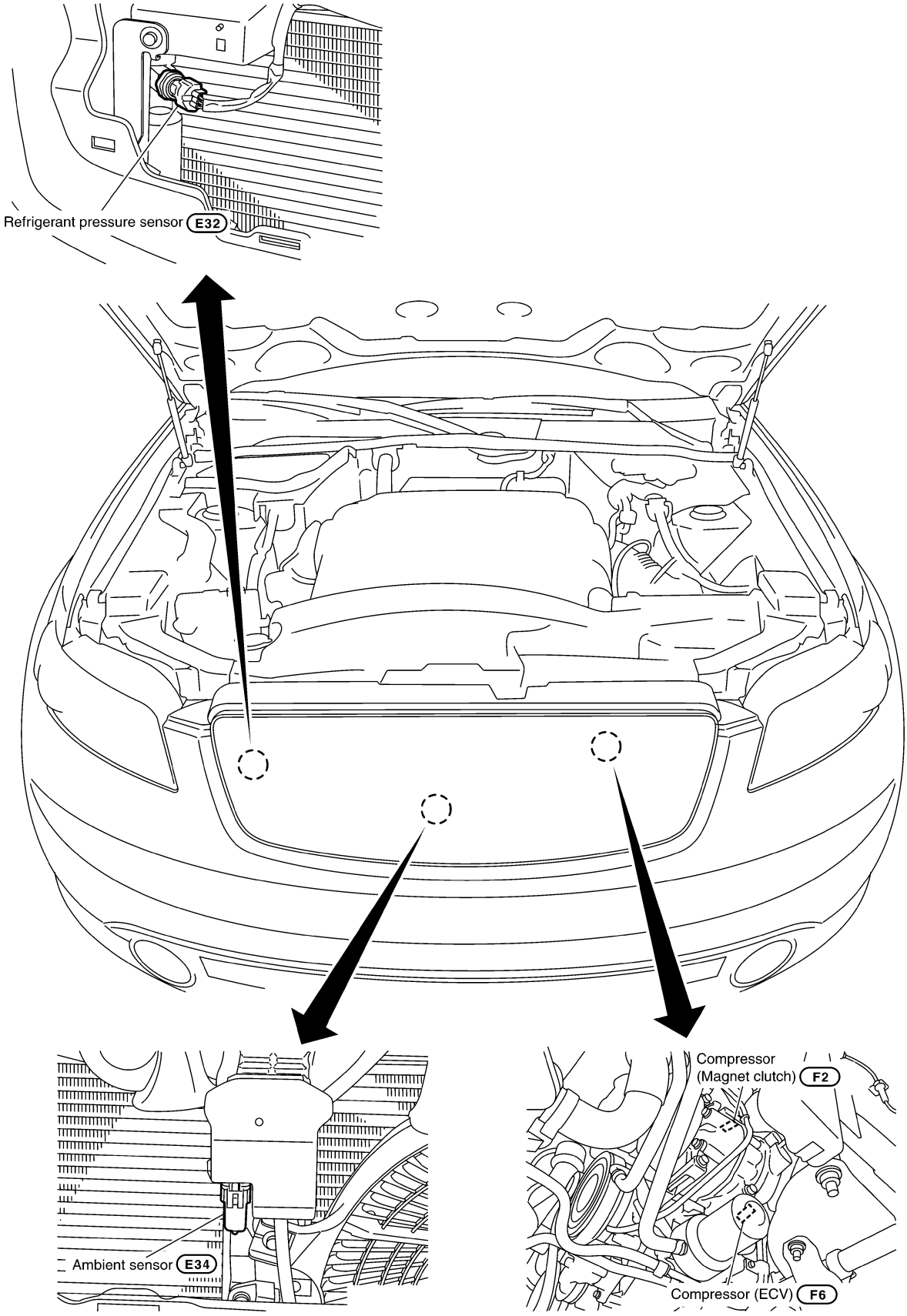

RJIA1963E

PASSENGER COMPARTMENT

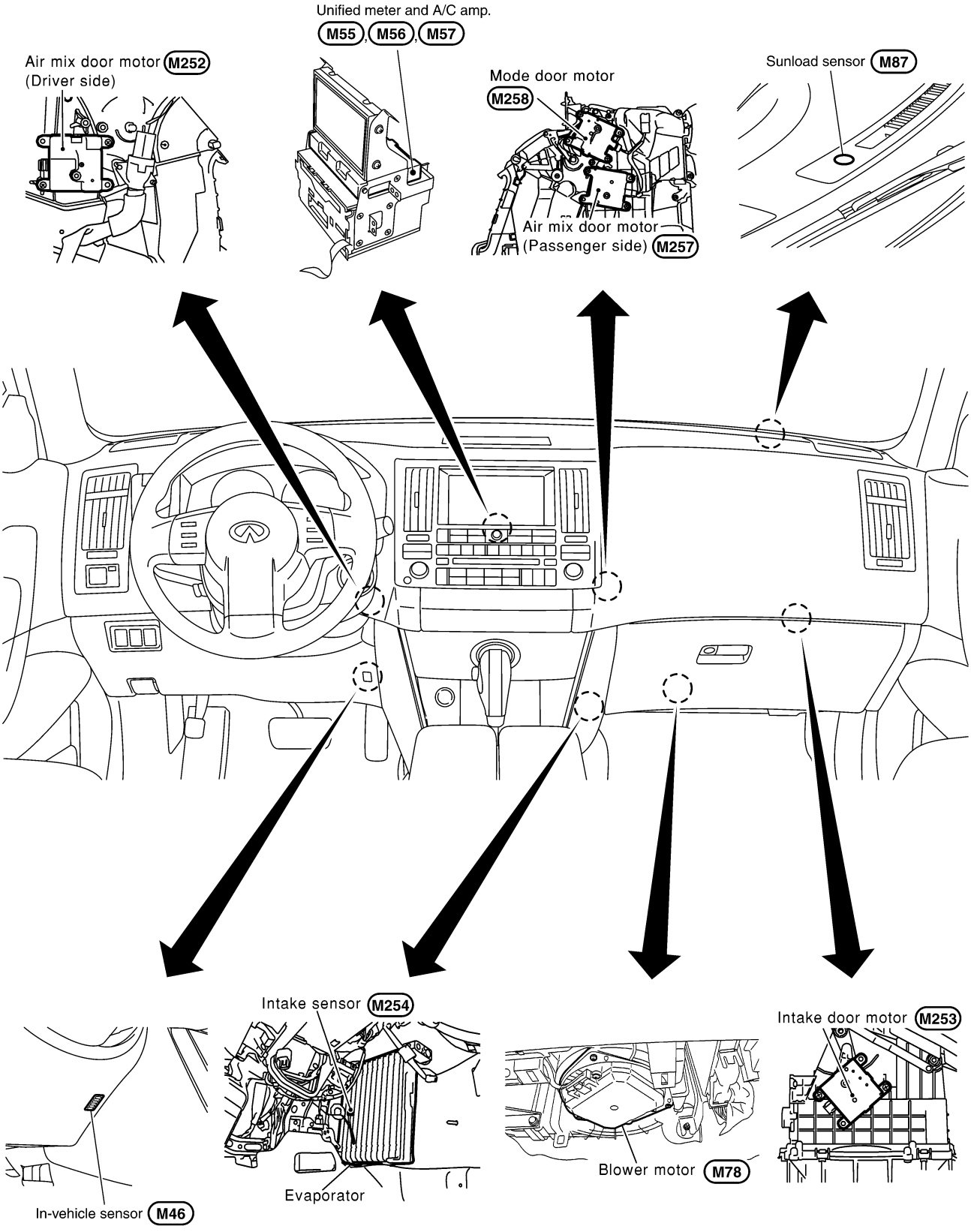

Schematic

AJS0014M

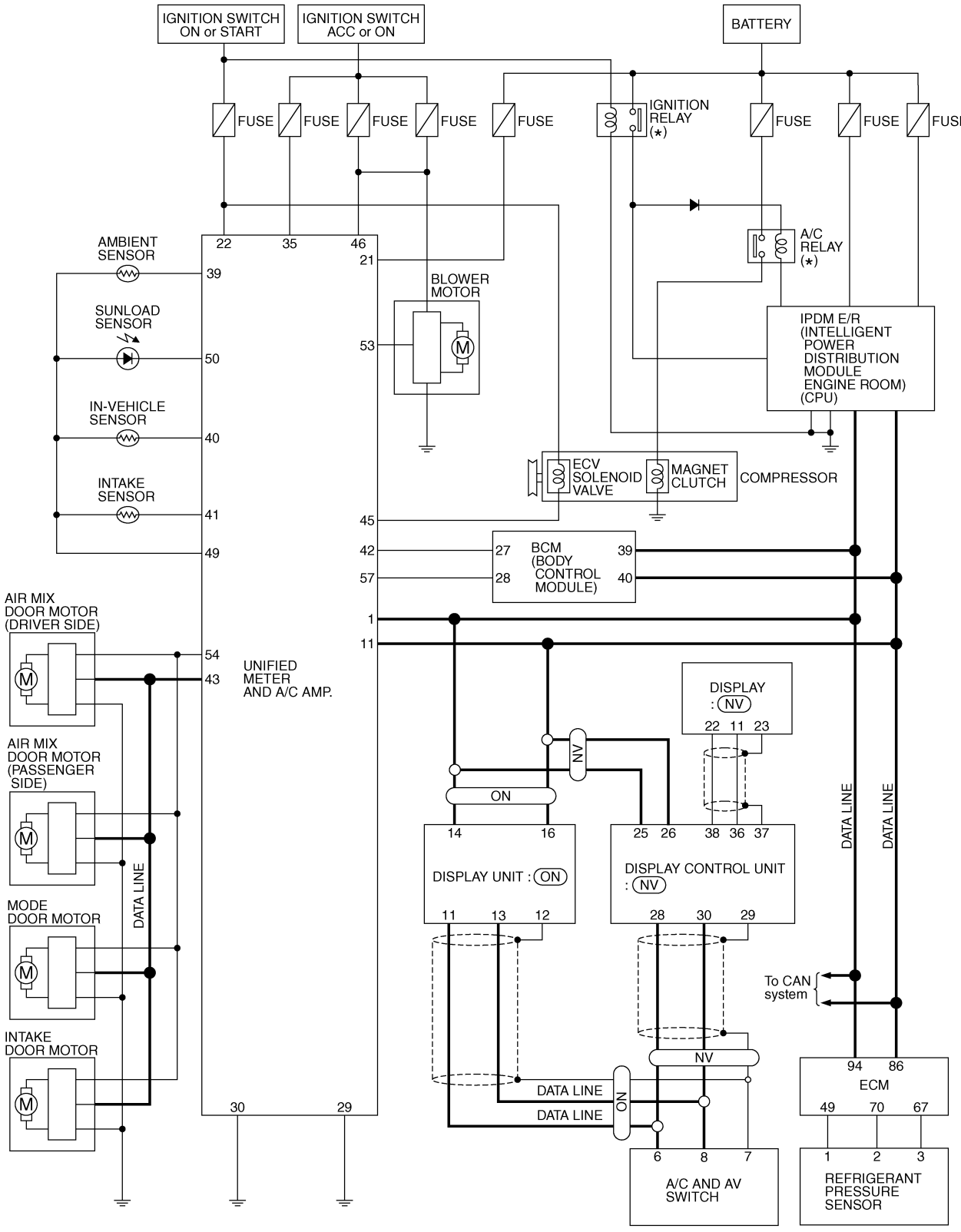

NV : With NAVI

ON : Without NAVI

* : This relay is built into the IPDM E/R (Intelligent power distribution module engine room).

TJWM0051E

Wiring Diagram —A/C—

AJS0014N

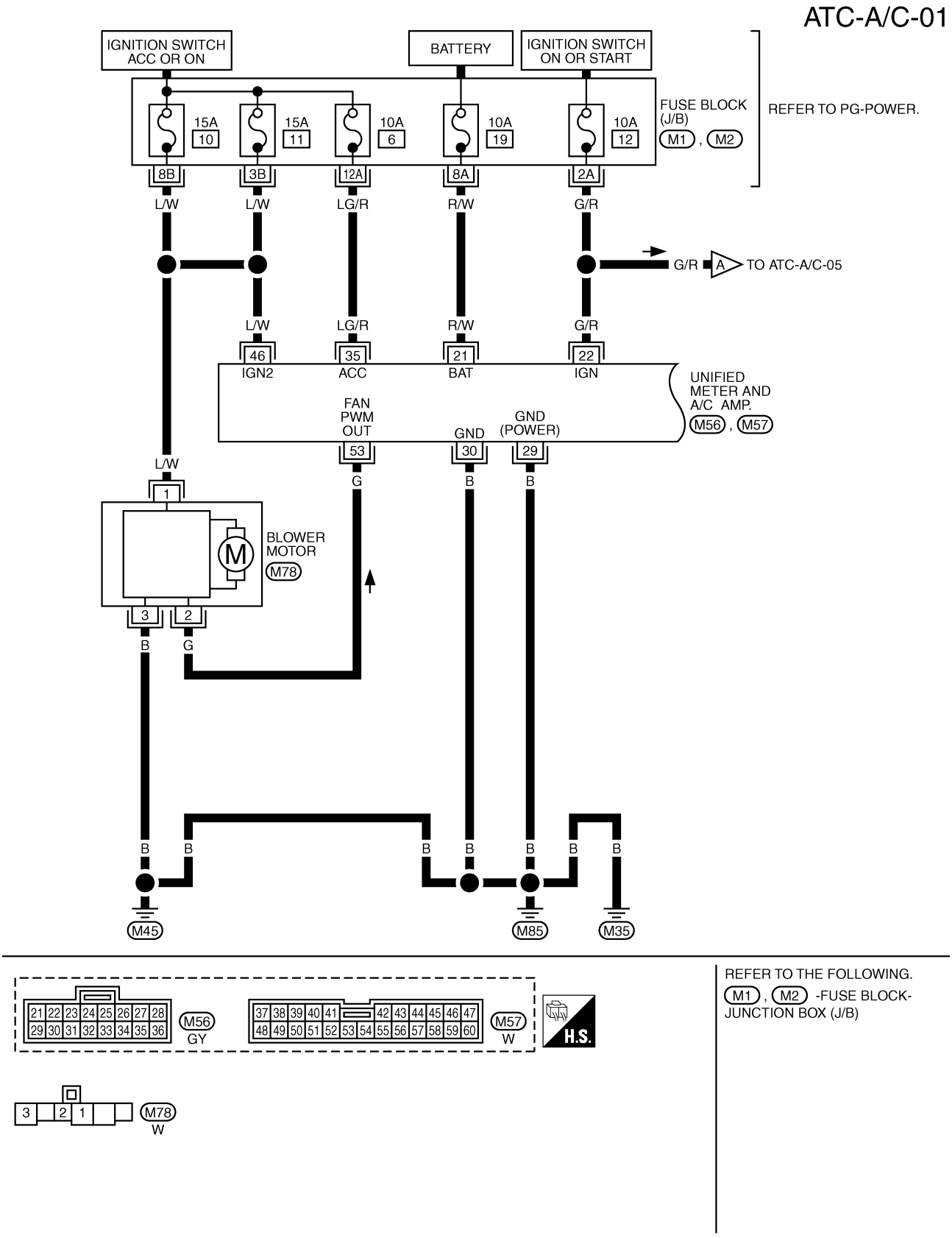

TJWM0151E

ATC-A/C-02

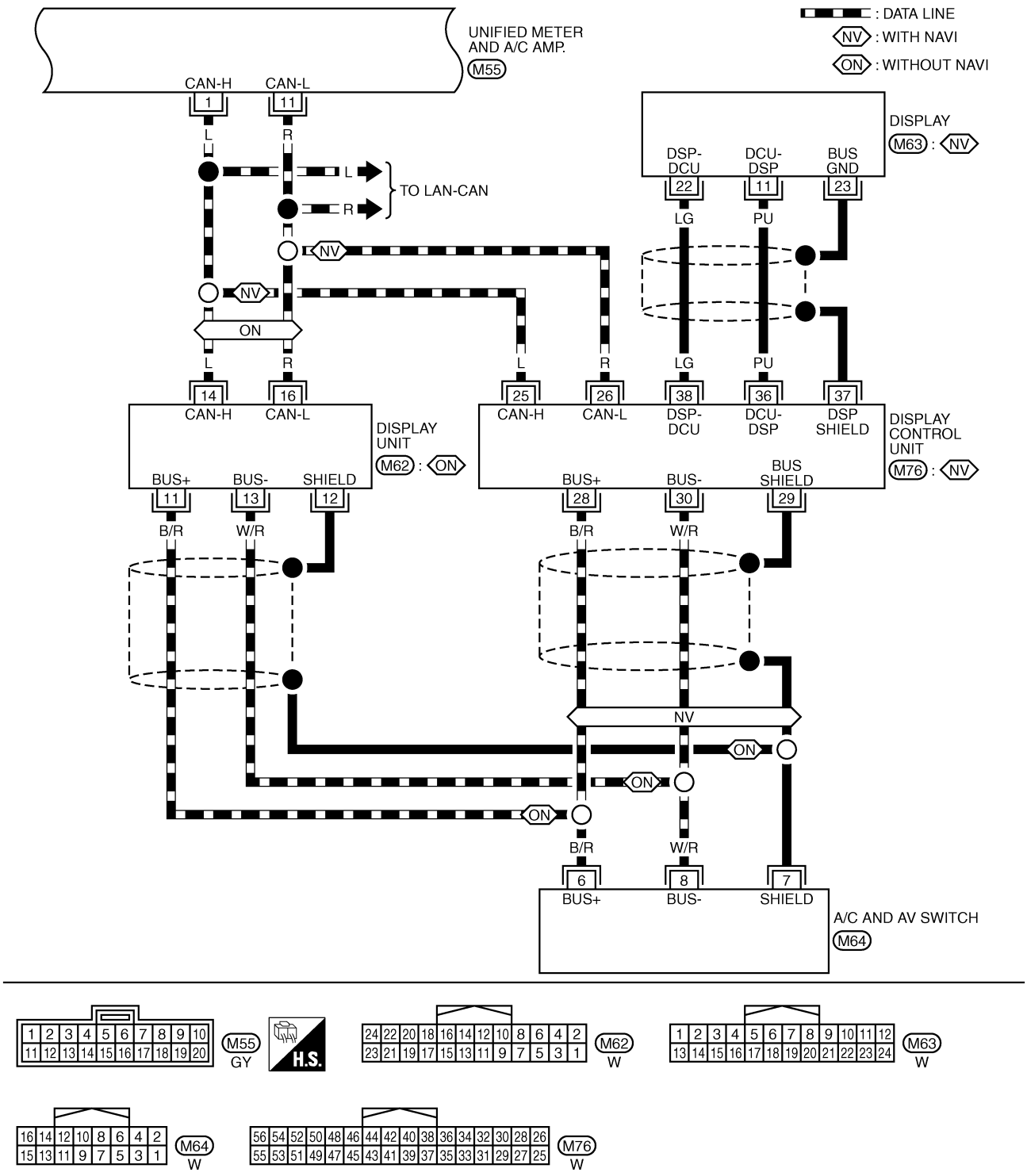

TJWM0053E

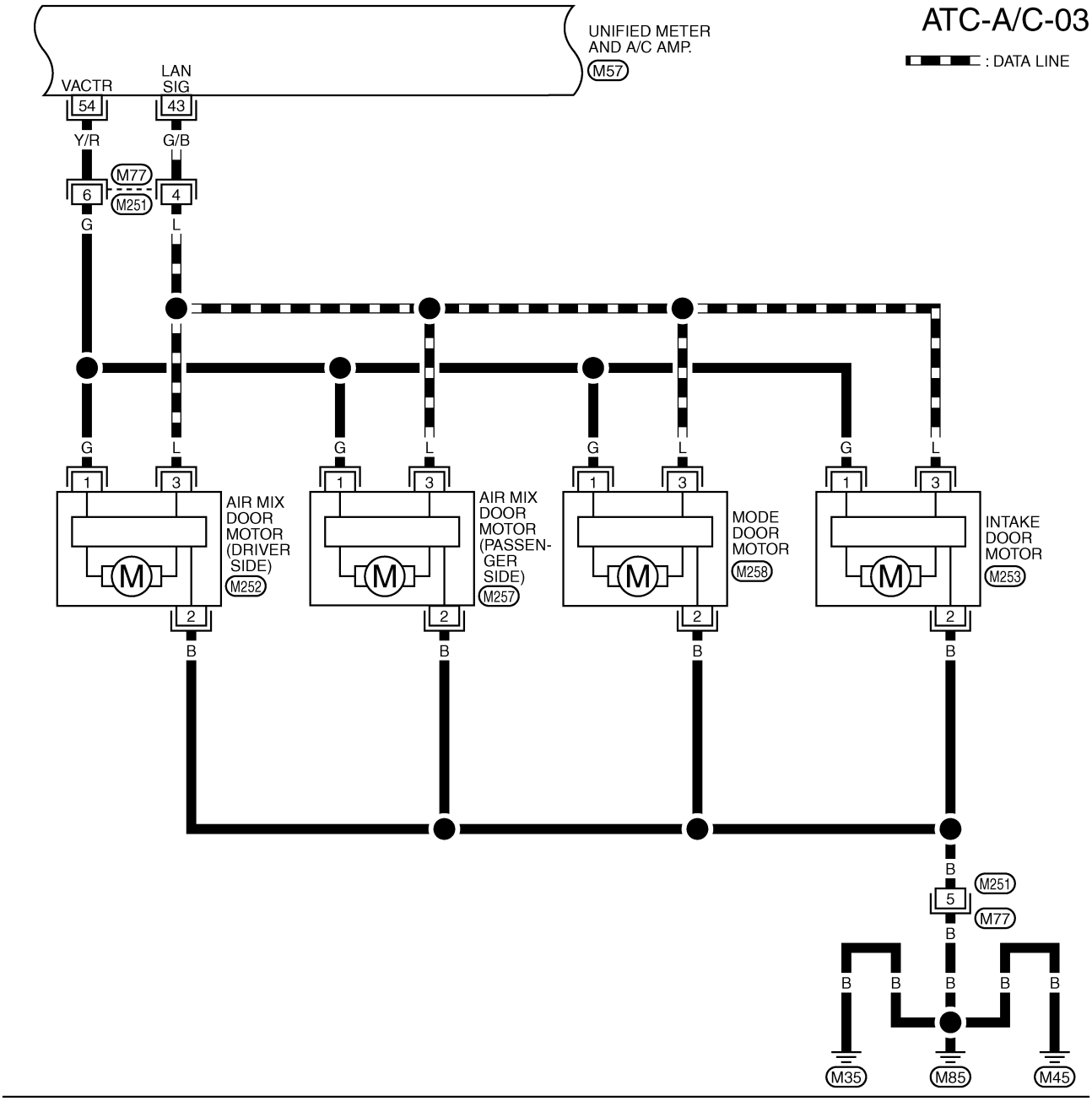

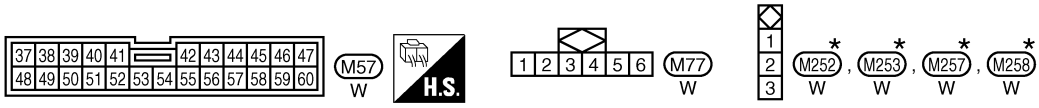

*: THIS CONNECTOR IS NOT SHOWN IN "HARNESS LAYOUT", PG SECTION.

TJWM0054E

ATC-A/C-04

: DATA LINE

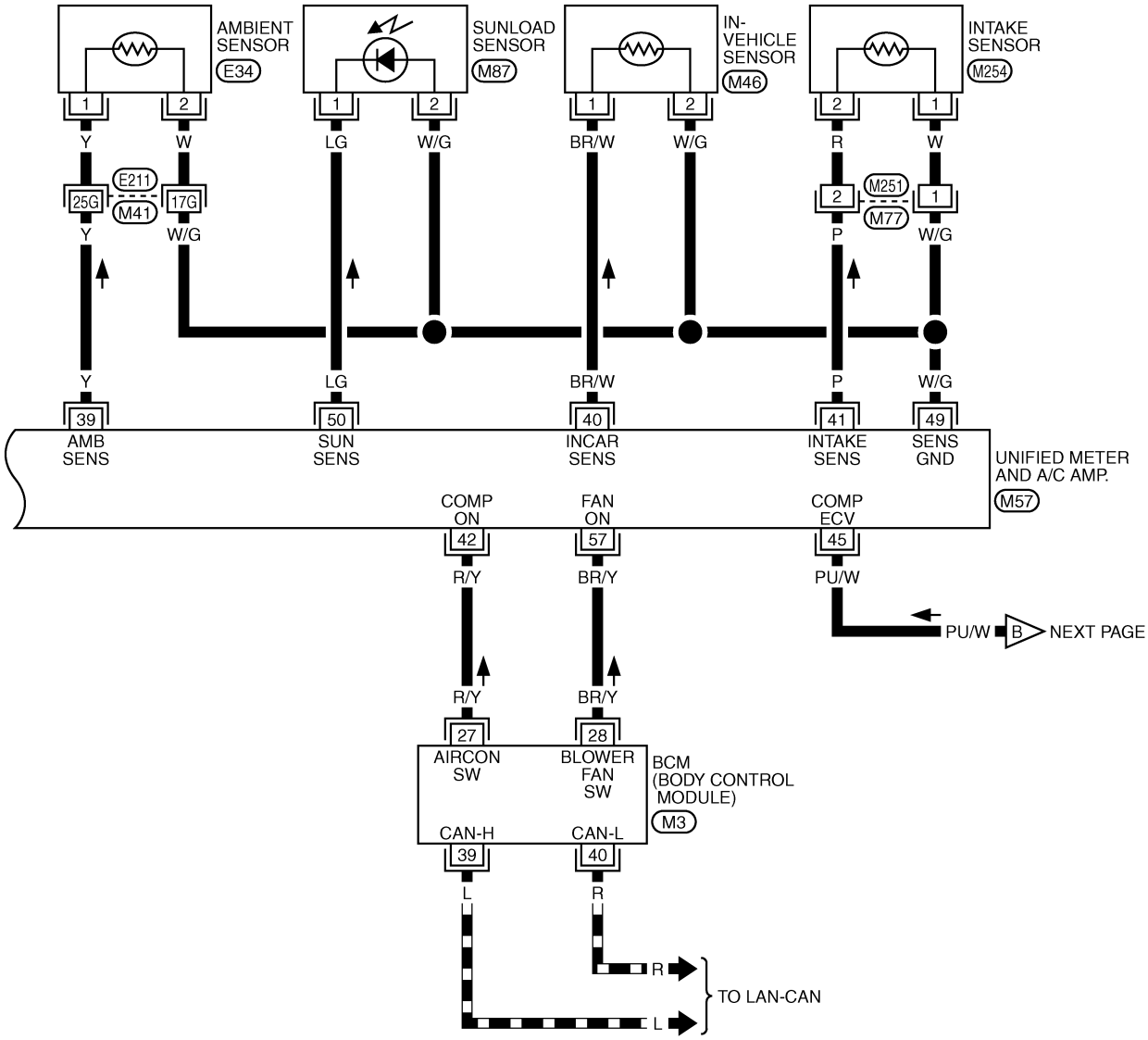

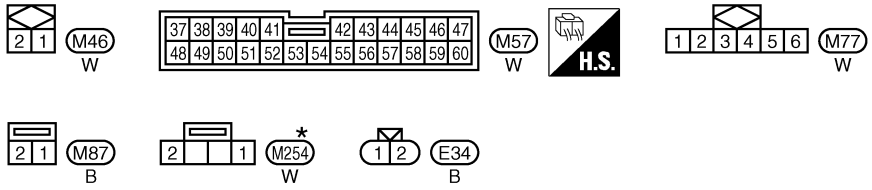

REFER TO THE FOLLOWING.
E211 -SUPER MULTIPLE JUNCTION (SMJ)
M3 -ELECTRICAL UNITS

*: THIS CONNECTOR IS NOT SHOWN IN "HARNESS LAYOUT", PG SECTION.

TJWM0055E

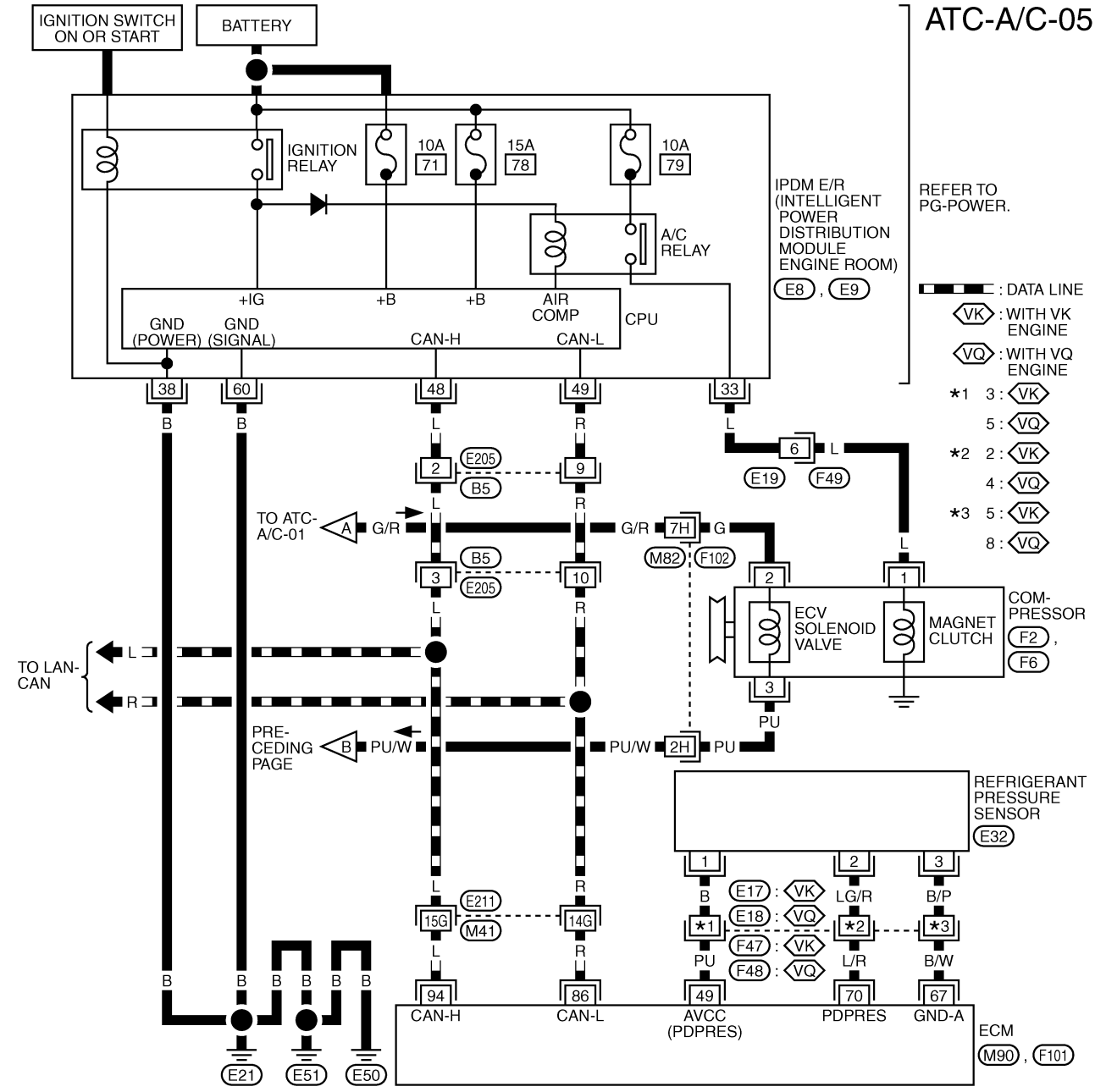

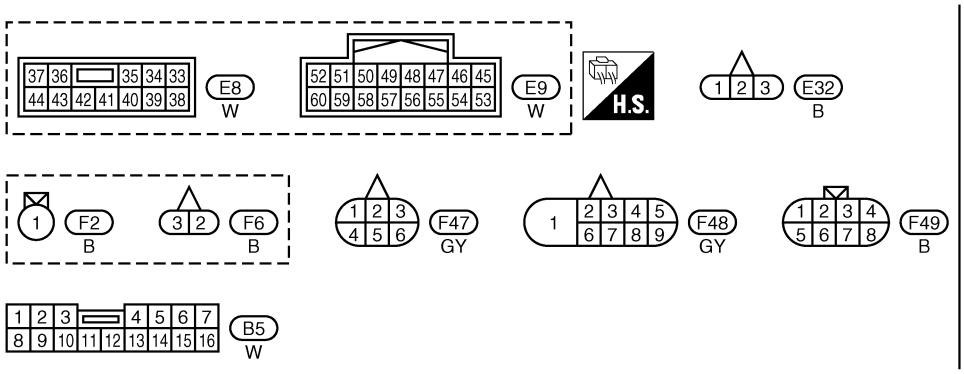

REFER TO THE FOLLOWING.
E211 , F102 -SUPER MULTIPLE JUNCTION (SMJ)
M90 , F101 -ELECTRICAL UNITS

TJWM0056E

Auto Amp. Terminals and Reference Value

AJS0014O

Measure voltage between each terminal and ground by referring terminals and reference value for unified meter and A/C amp.

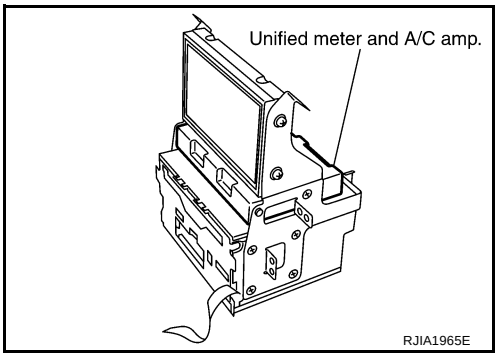

PIN CONNECTOR TERMINAL LAYOUT

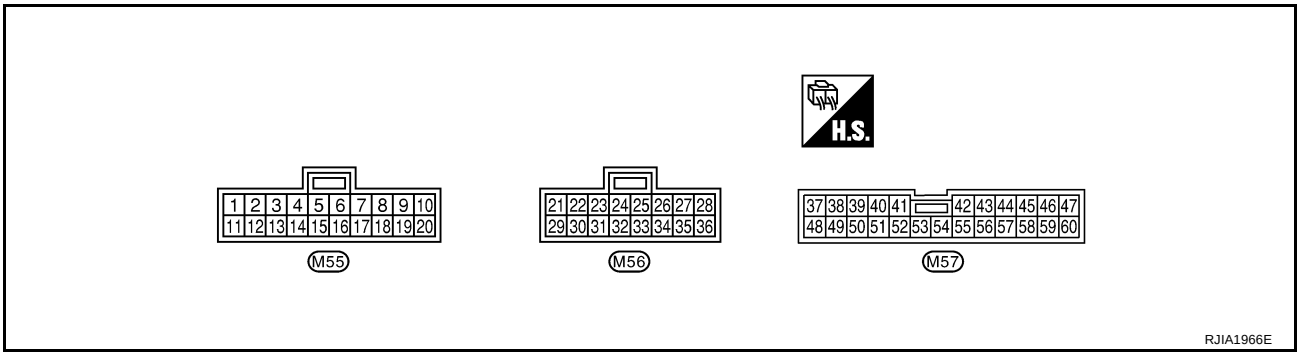

TERMINALS AND REFERENCE VALUE FOR UNIFIED METER AND A/C AMP.

Terminal No.	Wire color	Item	Ignition switch	Condition	Voltage (V)
1	L	CAN-H	—	—	—
11	R	CAN-L	—	—	—
21	R/W	Power supply for BATT	OFF	—	Battery voltage
22	G/R	Power supply for IGN	ON	—	Battery voltage
29	B	Ground (Power)	ON	—	Approx. 0
30	B	Ground	ON	—-	Approx. 0
35	LG/R	Power supply for ACC	ACC	—	Battery voltage
39	Y	Ambient sensor	—	—	—
40	BR/W	In-vehicle sensor	—	—	—
41	P	Intake sensor	—	—	—
42	R/Y	Compressor ON signal	ON	A/C switch: ON (Blower motor operates.)	Approx. 0
				OFF switch: ON (A/C system: OFF)	Approx. 5
43	G/B	A/C LAN signal	ON	—	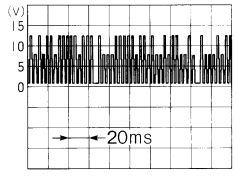 HAK0652D

Terminal No.	Wire color	Item	Ignition switch	Condition	Voltage (V)
45	PU/W	ECV (Electric Control Valve) signal	ON	Self-diagnosis. STEP-4 (Code No. 45)	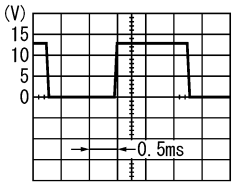 RJIA1606E
46	L/W	Power supply for IGN2	ON	—	Battery voltage
49	W/G	Sensor ground	ON	—	Approx. 0
50	LG	Sunload sensor	—	—	—
53	G	Blower motor control signal	ON	Blower speed: 1st step	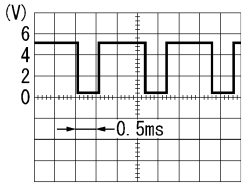 SJIA0116J
54	Y/R	Power supply for each door motor	ON	—	Battery voltage
57	BR/Y	Blower motor ON signal	ON	A/C switch: ON (Blower motor operates.)	Approx. 0
				OFF switch: ON (A/C system: OFF)	Approx. 5

Self-diagnosis Function

AJS0014P

DESCRIPTION

The self-diagnosis system diagnoses sensors, door motors, blower motor, etc. by system line. Refer to applicable sections (items) for details. Shifting from usual control to the self-diagnosis system is accomplished by starting the engine (turning the ignition switch ON) and pressing OFF switch for at least 5 seconds. The OFF switch must be pressed within 10 seconds after starting the engine (ignition switch is turned ON). This system will be canceled by either pressing AUTO switch or turning the ignition switch OFF. Shifting from one step to another is accomplished by means of pressing temperature switch (driver side), as required.
Shifting from STEP-5 to AUXILIARY MECHANISM is accomplished by means of pressing (fan) UP switch.

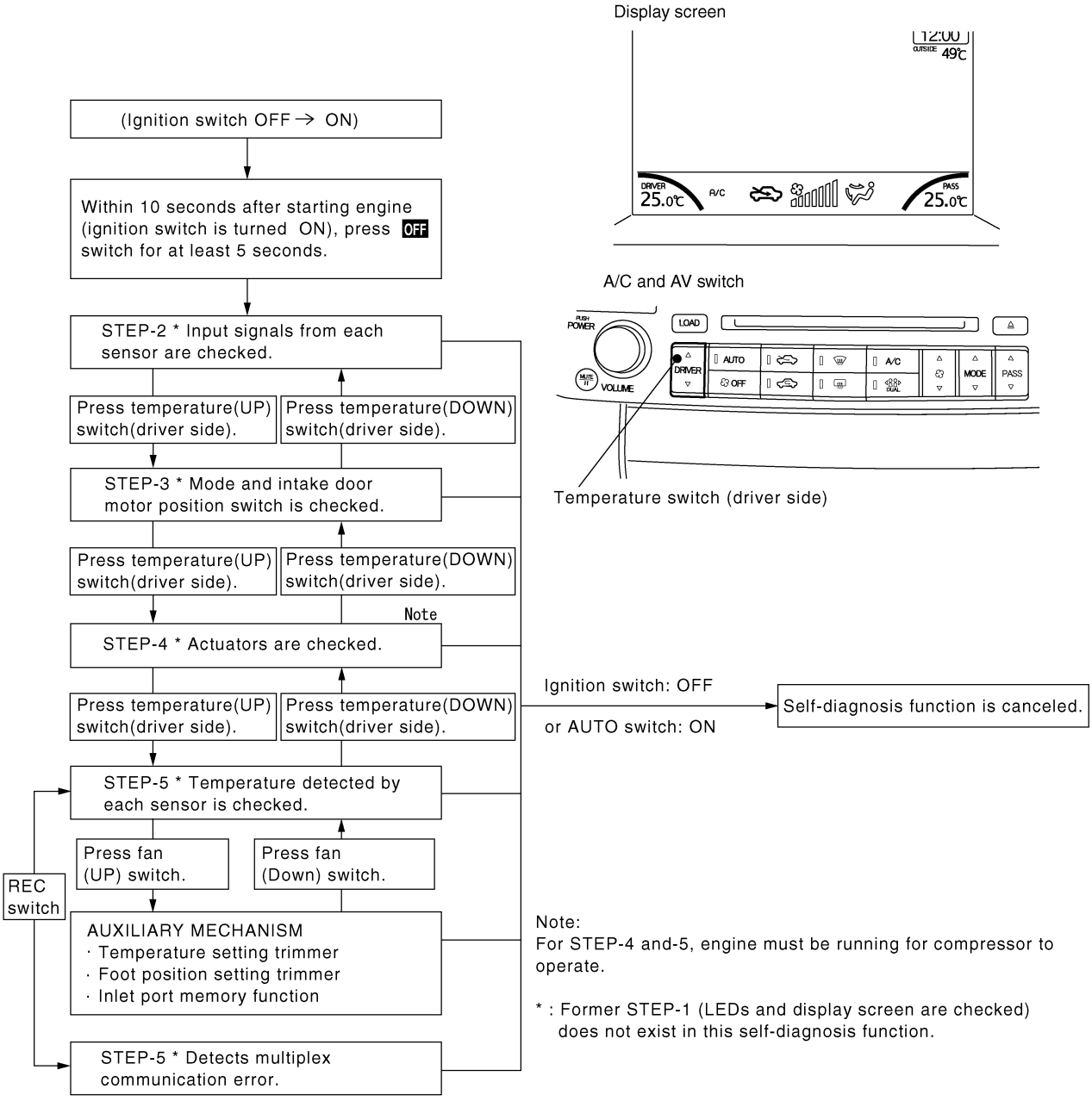

FUNCTION CONFIRMATION PROCEDURE

1. SET IN SELF-DIAGNOSIS MODE

1. Turn ignition switch ON.
2. Set in self-diagnosis mode as follows. Within 10 seconds after starting engine (ignition switch is turned ON.), press OFF switch for at least 5 seconds.

CAUTION:

- **If battery voltage drops below 12 V during diagnosis STEP-3, door motor speed becomes slower and as a result, the system may generate an error even when operation is normal. To avoid this, start engine before performing this diagnosis.**
- **Former STEP-1 (LEDs and display screen are checked) does not exist in this self-diagnosis function.**

>> GO TO 2.

2. STEP-2: SENSOR CIRCUITS ARE CHECKED FOR OPEN OR SHORT CIRCUIT

Does code No. 20 appear on the display?

YES >> GO TO 3.
NO >> GO TO 13.

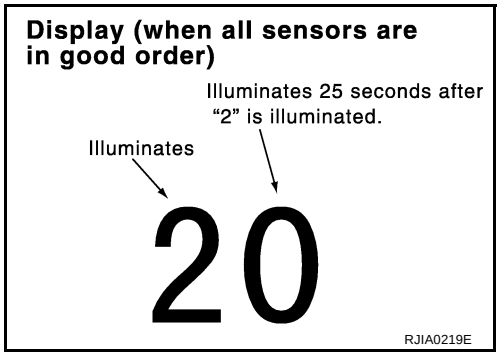

3. CHECK TO ADVANCE SELF-DIAGNOSIS STEP-3

Press temperature (UP) switch (driver side).

Advance to self-diagnosis STEP-3?

YES >> GO TO 4.
NO >> Replace A/C and AV switch. (Temperature dial malfunctions.)

4. CHECK TO RETURN SELF-DIAGNOSIS STEP-2

Press temperature (DOWN) switch (driver side).

Return to self-diagnosis STEP-2?

YES >> GO TO 5.
NO >> Malfunctioning OFF switch or unified meter and A/C amp. Refer to ATC-102, "Self-diagnosis" .

5. STEP-3: MODE DOOR AND INTAKE DOOR POSITIONS ARE CHECKED

Press temperature (UP) switch (driver side).

Does code No. 30 appear on the display?

YES >> GO TO 6.
NO >> GO TO 14.

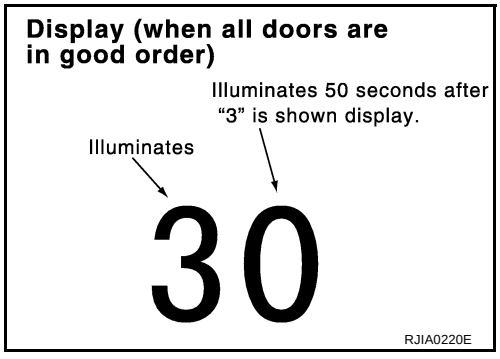

6. STEP-4: OPERATION OF EACH DOOR MOTOR IS CHECKED

1. Press temperature (UP) switch (driver side).
2. Press (DEF) switch. Code No. of each door motor test is indicated on the display.

>> GO TO 7.

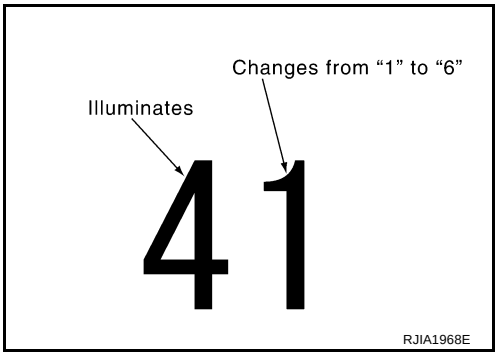

7. CHECK ACTUATORS

Refer to the following chart and confirm discharge air flow, air temperature, blower motor duty ratio and compressor operation.

Discharge air flow

Mode door position	Air outlet/distribution		
	Vent	Foot	Defroster
	100%	–	–
	58%	42%	–
	19% (25%)	61% (75%)	20% (–)
	14%	46%	40%
	–	–	100%

( ): Manually control

SJIA0302E

Code No.	41	42	43	44	45	46
Mode door position	VENT	B/L 1	B/L 2	FOOT*1	D/F	DEF
Intake door position	REC	REC	20% FRE	FRE	FRE	FRE
Air mix door position	FULL COLD	FULL COLD	FULL HOT	FULL HOT	FULL HOT	FULL HOT
Blower motor duty ratio	37%	91%	65%	65%	65%	91%
Compressor	ON	ON	OFF	OFF	ON	ON
Electronic control valve (ECV) duty ratio	100%	100%	0%	0%	50%	100%

Checks must be made visually, by listening to any noise, or by touching air outlets with hand, etc. for improper operation.
*1: FOOT position during automatic control. Refer to ATC-60, "AUXILIARY MECHANISM: FOOT POSITION SETTING TRIMMER" .

OK or NG

OK >> GO TO 8.

NG >>
- Air outlet does not change.
  Go to Mode Door Motor Circuit. Refer to ATC-70, "Mode Door Motor Circuit" .
- Intake door does not change.
  Go to Intake Door Motor Circuit. Refer to ATC-76, "Intake Door Motor Circuit" .
- Blower motor operation is malfunctioning.
  Go to Blower Motor Circuit. Refer to ATC-79, "Blower Motor Circuit" .
- Magnet clutch does not engage.
  Go to Magnet Clutch Circuit. Refer to ATC-84, "Magnet Clutch Circuit" .
- Discharge air temperature does not change.
  Go to Air Mix Door Motor Circuit. Refer to ATC-73, "Air Mix Door Motor Circuit" .

8. STEP-5: TEMPERATURE OF EACH SENSOR IS CHECKED

1. Press temperature (UP) switch (driver side).
2. Code No. 51 appears on the display.

>> GO TO 9.

9. CHECK AMBIENT SENSOR

Press (DEF) switch one time. Temperature detected by ambient sensor is indicated on the display.

NOTE:
If temperature shown on display greatly differs from actual temperature, check sensor circuit first, then inspect sensor.

OK or NG

OK >> GO TO 10.
NG >> Go to Ambient Sensor Circuit. Refer to ATC-104, "Ambient Sensor Circuit" .

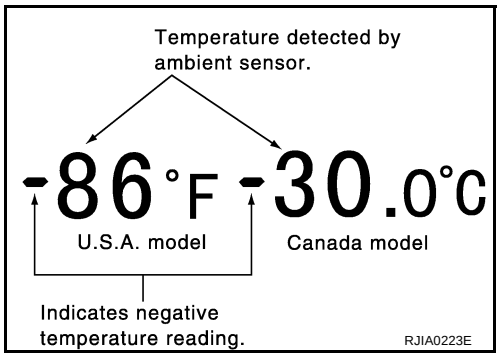

10. CHECK IN-VEHICLE SENSOR

Press (DEF) switch a second time. Temperature detected by in-vehicle sensor is indicated on the display.

NOTE:
If temperature shown on display greatly differs from actual temperature, check sensor circuit first, then inspect sensor.

OK or NG

OK >> GO TO 11.
NG >> Go to In-vehicle Sensor Circuit. Refer to ATC-107, "In-vehicle Sensor Circuit" .

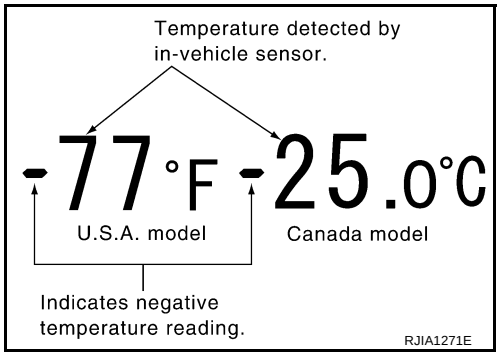

11. CHECK INTAKE SENSOR

Press (DEF) switch a third time. Temperature detected by intake sensor is indicated on the display.

NOTE:
If temperature shown on display greatly differs from actual temperature, check sensor circuit first, then inspect sensor.

OK or NG

OK >> GO TO 12.
NG >> Go to Intake Sensor Circuit. Refer to ATC-113, "Intake Sensor Circuit" .

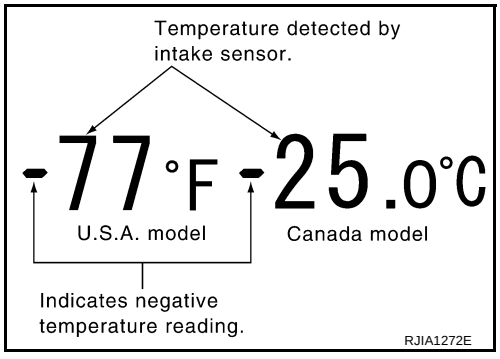

12. CHECK CAN COMMUNICATION ERROR

1. Press (REC) switch.
2. CAN communication error between unified meter and A/C amp. and display unit or display control unit is detected.

OK or NG

OK >> 1. Turn ignition switch OFF or AUTO switch ON.
2. INSPECTION END

NG >> Go to CAN communication. Refer to BCS-15, "CAN Communication Inspection Using CONSULT-II (Self-Diagnosis)" .
- Unified meter and A/C amp. - Display unit
- Unified meter and A/C amp. - Display control unit

Display	Multiplex communication error
52	In good order
52	Display unit or Display control unit ⇨ Unified meter and A/C amp.
52	Unified meter and A/C amp. ⇨ Display unit or Display control unit

RJIA1969E

13. CHECK MALFUNCTIONING SENSOR

Refer to the following chart for malfunctioning code No.
(If two or more sensors malfunction, corresponding code Nos. blink respectively twice.)
*1: Perform self-diagnosis STEP-2 under sunshine.
When performing indoors, aim a light (more than 60 W) at sunload sensor, otherwise code No. 25 will indicate despite that sunload sensor is functioning properly.

Code No.	Malfunctioning sensor (Including circuits)	Reference page
21 / –21	Ambient sensor	*2
22 / –22	In-vehicle sensor	*3
24 / –24	Intake sensor	*4
25 / –25	Sunload sensor *1	*5
26 / –26	Air mix door motor PBR (Driver side)	*6
27 / –27	Air mix door motor PBR (Passenger side)	

*2: ATC-104, "DIAGNOSIS PROCEDURE FOR AMBIENT SENSOR" .
*3: ATC-108, "DIAGNOSIS PROCEDURE FOR IN-VEHICLE SENSOR" .
*4: ATC-113, "DIAGNOSIS PROCEDURE FOR INTAKE SENSOR" .
*5: ATC-110, "DIAGNOSIS PROCEDURE FOR SUNLOAD SENSOR" .
*6: ATC-75, "DIAGNOSIS PROCEDURE FOR AIR MIX DOOR MOTOR PBR" .

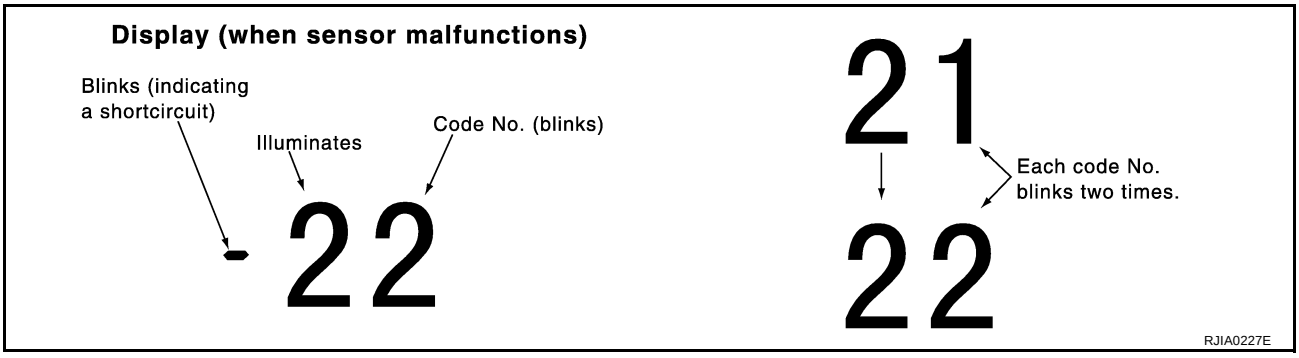

>> INSPECTION END

14. CHECK MALFUNCTIONING DOOR MOTOR POSITION SWITCH

Mode and/or intake door motor PBR(s) is/are malfunctioning.

Code No. *1 *2	Mode or intake door position		Reference page
31	VENT	Mode door motor	*4
32	B/L 1		
33	B/L 2		
34	FOOT*3		
35	D/F		
36	DEF		
37	FRE	Intake door motor	*5
38	20% FRE		
39	REC		

(If two or more mode or intake doors are out of order, corresponding code numbers blink respectively twice.)
*1: If mode door motor harness connector is disconnected, the following display pattern will appear.
31→32→33→34→35→36→Return to 31
*2: If intake door motor harness connector is disconnected, the following display pattern will appear.
37→38→39→Return to 37
*3: FOOT position during automatic control. Refer to ATC-60, "AUXILIARY MECHANISM: FOOT POSITION SETTING TRIMMER" .
*4: ATC-72, "DIAGNOSIS PROCEDURE FOR MODE DOOR MOTOR" .
*5: ATC-78, "DIAGNOSIS PROCEDURE FOR INTAKE DOOR MOTOR" .

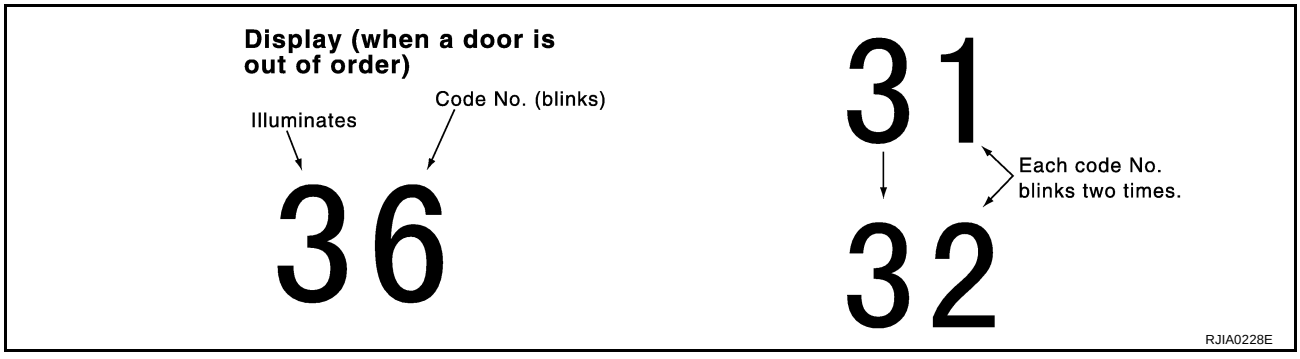

>> INSPECTION END

AUXILIARY MECHANISM: TEMPERATURE SETTING TRIMMER

The trimmer compensates for differences in range of ±3°C (±6°F) between temperature setting (displayed digitally) and temperature felt by customer.

Operating procedures for this trimmer are as follows:

1. Begin self-diagnosis STEP-5 mode. Refer to ATC-53, "Self-diagnosis Function" .
2. Press ⊛ (fan) UP switch to set system in auxiliary mode.
3. Display shows 61 in auxiliary mechanism. It takes approximately 3 seconds.
4. Press temperature switch (driver side) as desired. Temperature will change at a rate of 0.5°C (1.0°F) each time a switch is pressed.

CAUTION:
A decimal point is not indicated when the display shows "°C".

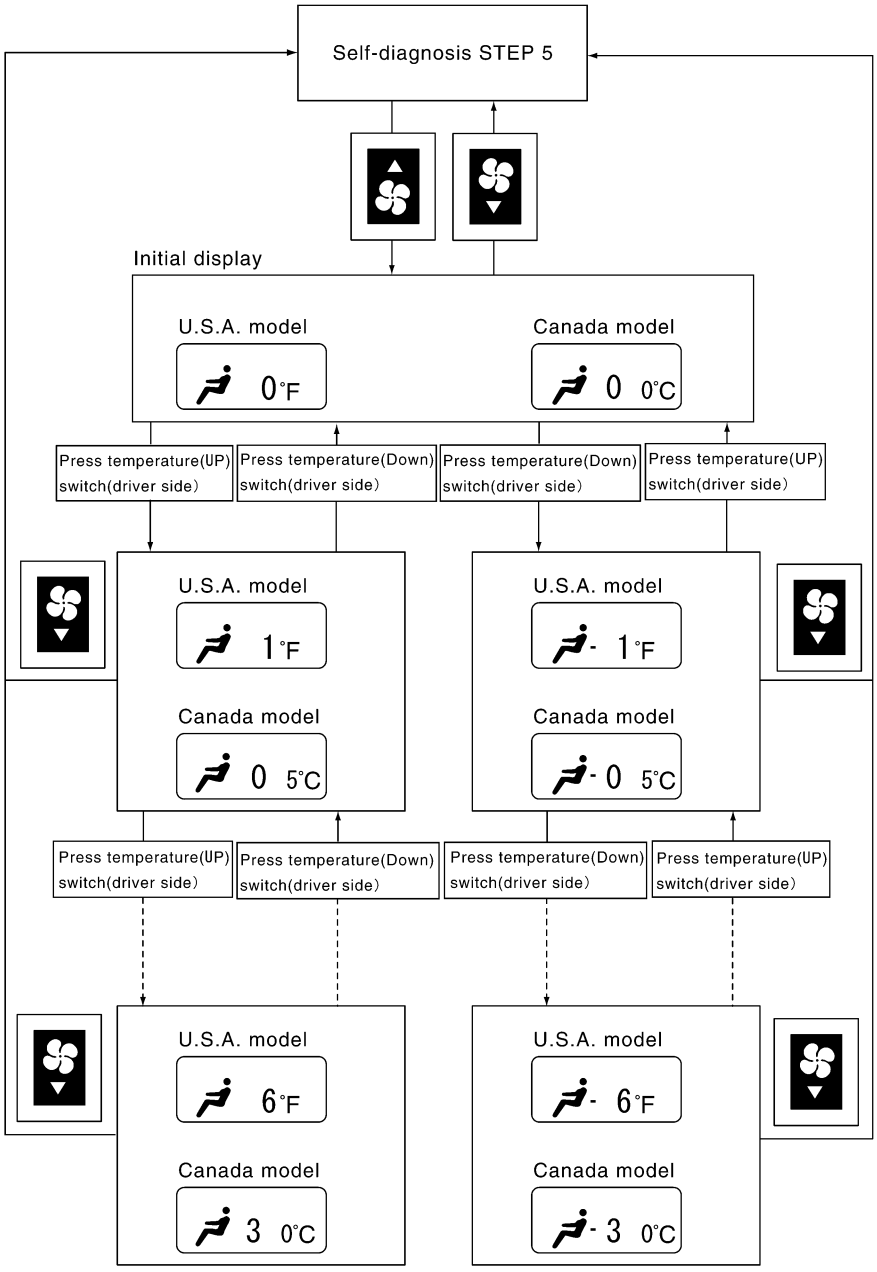

When battery cable is disconnected, trimmer operation is canceled. Temperature set becomes that of initial condition, i.e. 0°C (0°F).

AUXILIARY MECHANISM: FOOT POSITION SETTING TRIMMER

Wind distribution ratio in FOOT mode can be set.

Operating procedures for this trimmer are as follows:

1. Begin self-diagnosis STEP-5 mode. Refer to ATC-53, "Self-diagnosis Function" .
2. Press ✠ (fan) UP switch to set system in auxiliary mode.
3. Display shows 61 in auxiliary mechanism. It takes approximately 3 seconds.
4. Press the mode switch as desired.

Display	Discharge air flow					
	Automatically controls the mode door			Manually controls the mode door		
	VENT	FOOT	DEF	VENT	FOOT	DEF
	19%	61%	20%	25%	75%	–
	19%	61%	20%	19%	61%	20%
	25%	75%	–	19%	61%	20%
	25%	75%	–	25%	75%	–

RJIA1971E

AUXILIARY MECHANISM: INLET PORT MEMORY FUNCTION

When ignition switch is turned from OFF to ON, inlet port can be set to AUTO or manual.

Operating procedures for this trimmer are as follows:

1. Begin self-diagnosis STEP-5 mode. Refer to ATC-53, "Self-diagnosis Function" .
2. Press ✠ (fan) UP switch to set system in auxiliary mode.
3. Display shows 61 in auxiliary mechanism. It takes approximately 3 seconds.
4. Press the recirculation (REC) and fresh (FRE) switch as desired.

Switch	LED status of REC/FRE switch	Setting status	Setting changeover method
REC	ON	Manual REC status is memorized. (Initial setting)	REC SW: ON
	OFF	AUTO control	
FRE	ON	Manual FRE status is memorized.	FRE SW: ON
	OFF	AUTO control (Initial setting)	

Operational Check

AJS0014Q

The purpose of the operational check is to check if the individual system operates properly.

Conditions : Engine running at normal operating temperature

CHECKING MEMORY FUNCTION

1. Set the temperature to 32°C (90°F).
2. Press OFF switch.
3. Turn ignition switch OFF.
4. Turn ignition switch ON.
5. Press the AUTO switch.
6. Confirm that the set temperature remains at previous temperature.
7. Press OFF switch.

If NG, go to trouble diagnosis procedure for ATC-103, "Memory Function" .
If OK, continue the check.

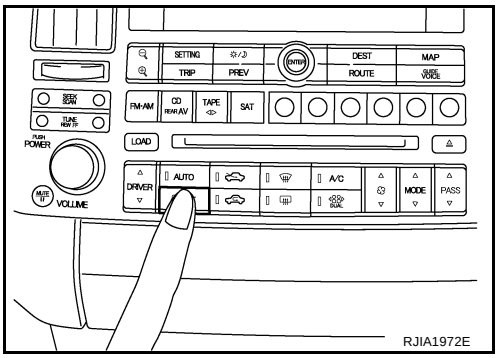

CHECKING BLOWER

1. Press fan (UP) switch. Blower should operate on low speed. The fan symbol should have one blade lit.
2. Press fan (UP) switch again, and continue checking blower speed and fan symbol until all speeds are checked.
3. Leave blower on max. speed.

If NG, go to trouble diagnosis procedure for ATC-79, "Blower Motor Circuit" .
If OK, continue the check.

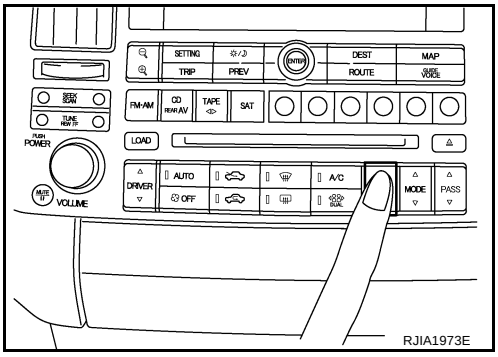

CHECKING DISCHARGE AIR

1. Press MODE switch and DEF switch.
2. Each position indicator should change shape.

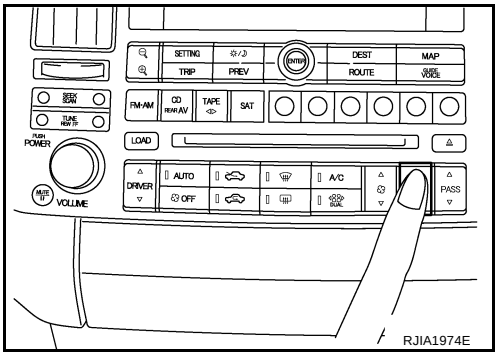

3. Confirm that discharge air comes out according to the air distribution table. Refer to ATC-37, "Discharge Air Flow" .

If NG, go to trouble diagnosis procedure for ATC-70, "Mode Door Motor Circuit" .
If OK, continue the check.

NOTE:
Confirm that the compressor clutch is engaged (sound or visual inspection) and intake door position is at FRESH when the D/F or DEF is selected.

Discharge air flow

Mode door position	Air outlet/distribution		
	Vent	Foot	Defroster
	100%	–	–
	58%	42%	–
	19% (25%)	61% (75%)	20% (–)
	14%	46%	40%
	–	–	100%

( ): Manually control

SJIA0302E

CHECKING INTAKE AIR

1. Press recirculation (REC) switch one time. Recirculation indicator should illuminate.
2. Press fresh (FRE) switch one time. Fresh indicator should illuminate.
3. Listen for intake door position change. (Slight change of blower sound can be heard.)

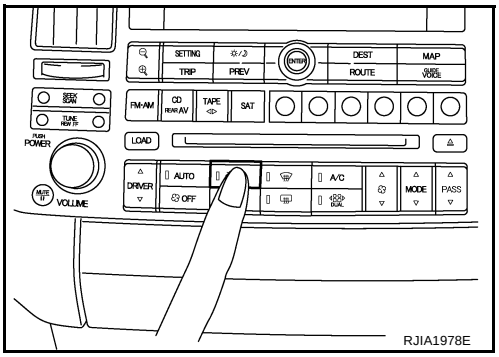

If NG, go to trouble diagnosis procedure for ATC-76, "Intake Door Motor Circuit" .
If OK, continue the check.

NOTE:
Confirm that the compressor clutch is engaged (sound or visual inspection) and intake door position is at FRESH when the D/F or DEF is selected.

CHECKING TEMPERATURE DECREASE

1. Press temperature (DOWN) switch (driver side) until 18°C (60°F) is displayed.
2. Check for cold air at discharge air outlets.

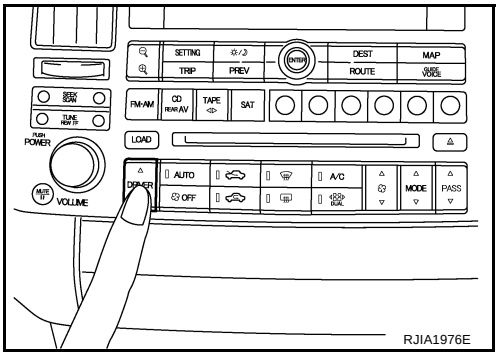

If NG, go to trouble diagnosis procedure for ATC-91, "Insufficient Cooling" .
If OK, continue the check.

CHECKING TEMPERATURE INCREASE

1. Press temperature (UP) switch (driver side) until 32°C (90°F) is displayed.
2. Check for hot air at discharge air outlets.

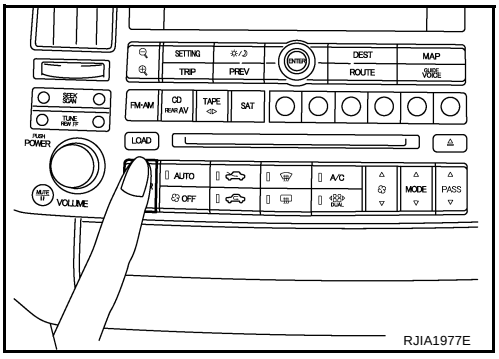

If NG, go to trouble diagnosis procedure for ATC-100, "Insufficient Heating" .
If OK, continue the check.

CHECK A/C SWITCH

1. Press AUTO switch and A/C switch.
2. A/C switch indicator will turn ON.
   - Confirm that the compressor clutch engages (sound or visual inspection).

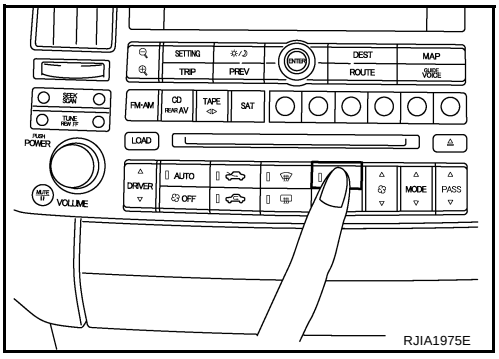

If NG, go to trouble diagnosis procedure for ATC-84, "Magnet Clutch Circuit" .
If OK, continue the check.

CHECKING AUTO MODE

1. Press AUTO switch and A/C switch.
2. Display should indicate AUTO.
   - Confirm that the compressor clutch engages (sound or visual inspection). (Discharge air and blower speed will depend on ambient, in-vehicle, and set temperatures.)

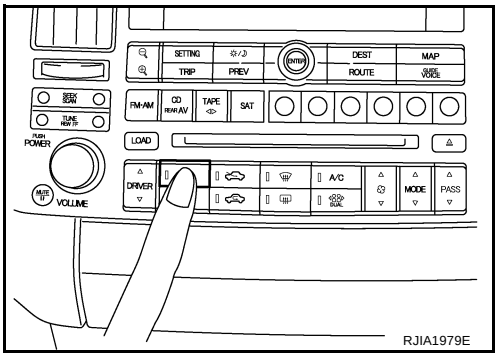

If NG, go to trouble diagnosis procedure for ATC-63, "Power Supply and Ground Circuit for Auto Amp." , then if necessary, trouble diagnosis procedure for ATC-84, "Magnet Clutch Circuit" .
If all operational checks are OK (symptom cannot be duplicated), go to Incident Simulation Tests in GI-27, "How to Perform Efficient Diagnosis for an Electrical Incident" and perform tests as outlined to simulate driving conditions environment. If symptom appears, refer to ATC-42, "SYMPTOM TABLE" and perform applicable trouble diagnosis procedures.

Power Supply and Ground Circuit for Auto Amp.

AJS001BF

SYMPTOM: A/C system does not come on.

INSPECTION FLOW

1. Confirm symptom by performing the following operatonal check.

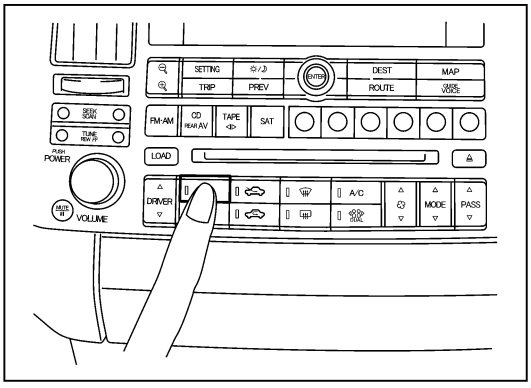

OPERATIONAL CHECK – AUTO mode

a. Press AUTO switch and A/C switch.
b. Display should indicate AUTO.
Confirm that the compressor clutch engages (Sound or visual inspection).
(Discharge air and blower speed will depend on ambient, in-vehicle and set temperatures.)

If OK (symptom cannot be duplicated), perform complete operational check (*2).
If NG (symptom is confirmed), continue with STEP-2 following.

2. Check for any service bulletins.
3. Check Main Power Supply and Ground Circuit. (*1)
4. Check Integrated Display System (*3) or Navigation System (*4).
   OK
5. Replace unified meter and A/C amp.

RJIA1980E

*1 ATC-64, "DIAGNOSIS PROCEDURE FOR A/C SYSTEM"
*2 ATC-61, "Operational Check"
*3 AV-78, "Trouble Diagnosis Chart by Symptom"
*4 AV-166, "A/C Screen Is Not Shown (NAVI Screen Is Shown)"

COMPONENT DESCRIPTION

Unified Meter and A/C Amp. (Automatic Amplifier)

The unified meter and A/C amp. has a built-in microcomputer which processes information sent from various sensors needed for air conditioner operation. The air mix door motor, mode door motor, intake door motor, blower motor and compressor are then controlled.
When the various switches and temperature switch are operated, data is input to the unified meter and A/C amp. from the display unit/display control unit using CAN communication.
Self-diagnosis functions are also built into unified meter and A/C amp. to provide quick check of malfunctions in the auto air conditioner system.

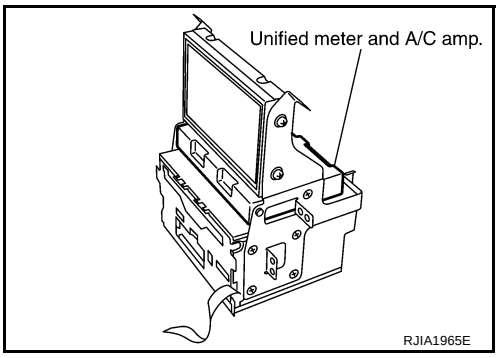

Potentio Temperature Control (PTC)

The PTC is built into the A/C and AV switch. It can be set at an interval of 0.5°C (1.0°F) in the 18°C (60°F) to 32°C (90°F) temperature range by pressing temperature switch. The set temperature is displayed.

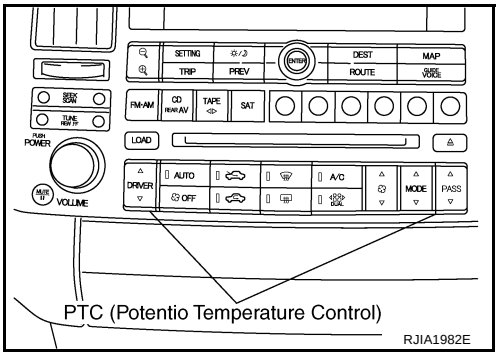

DIAGNOSIS PROCEDURE FOR A/C SYSTEM

SYMPTOM: A/C system does not come on.

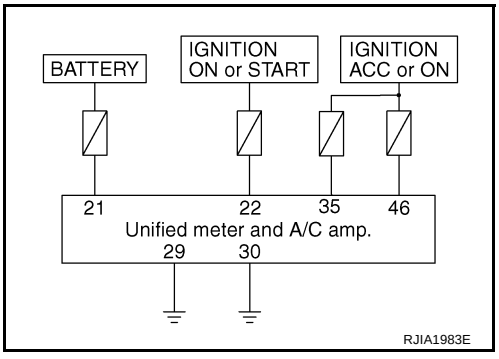

1. CHECK POWER SUPPLY CIRCUIT FOR UNIFIED METER AND A/C AMP.

1. Disconnect unified meter and A/C amp. connector.
2. Check voltage between unified meter and A/C amp. harness connector M56 terminals 21 (R/W), 22 (G/R) and 35 (LG/R), unified meter and A/C amp. harness connector M57 terminal 46 (L/W) and ground.

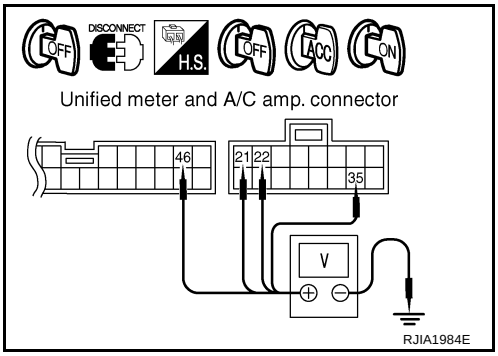

Terminals			Ignition switch position		
(+)		(-)	OFF	ACC	ON
Unified meter and A/C amp. connector	Terminal No. (wire color)				
M56	21 (R/W)	Ground	Battery voltage	Battery voltage	Battery voltage
M56	22 (G/R)		Approx. 0 V	Approx. 0 V	Battery voltage
M56	35 (LG/R)		Approx. 0 V	Battery voltage	Battery voltage
M57	46 (L/W)		Approx. 0 V	Battery voltage	Battery voltage

OK or NG

OK >> GO TO 2.

NG >> Check 10 A and 15 A fuses [Nos. 6, 10, 11, 12 and 19, located in the fuse block (J/B)]. Refer to PG-82, "FUSE BLOCK - JUNCTION BOX (J/B)" .

- If fuses are OK, check harness for open circuit. Repair or replace if necessary.
- If fuses are NG, replace fuse and check harness for short circuit. Repair or replace if necessary.

2. CHECK GROUND CIRCUIT FOR UNIFIED METER AND A/C AMP.

1. Turn ignition switch OFF.
2. Check continuity between unified meter and A/C amp. harness connector M56 terminal 29 (B), 30 (B) and ground.

29, 30 – Ground : Continuity should exist.

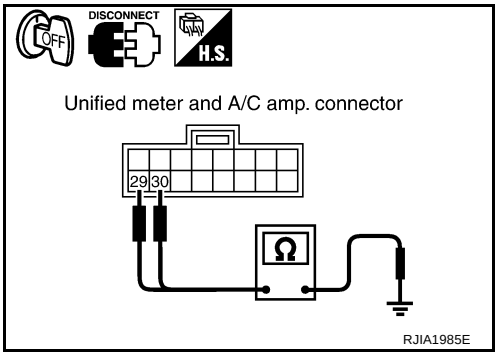

OK or NG

OK >> Replace unified meter and A/C amp.

NG >> Repair harness or connector.

LAN System Circuit

AJS0014S

SYMPTOM: Mode door motor, intake door motor and/or air mix door motor(s) does not operate normally.

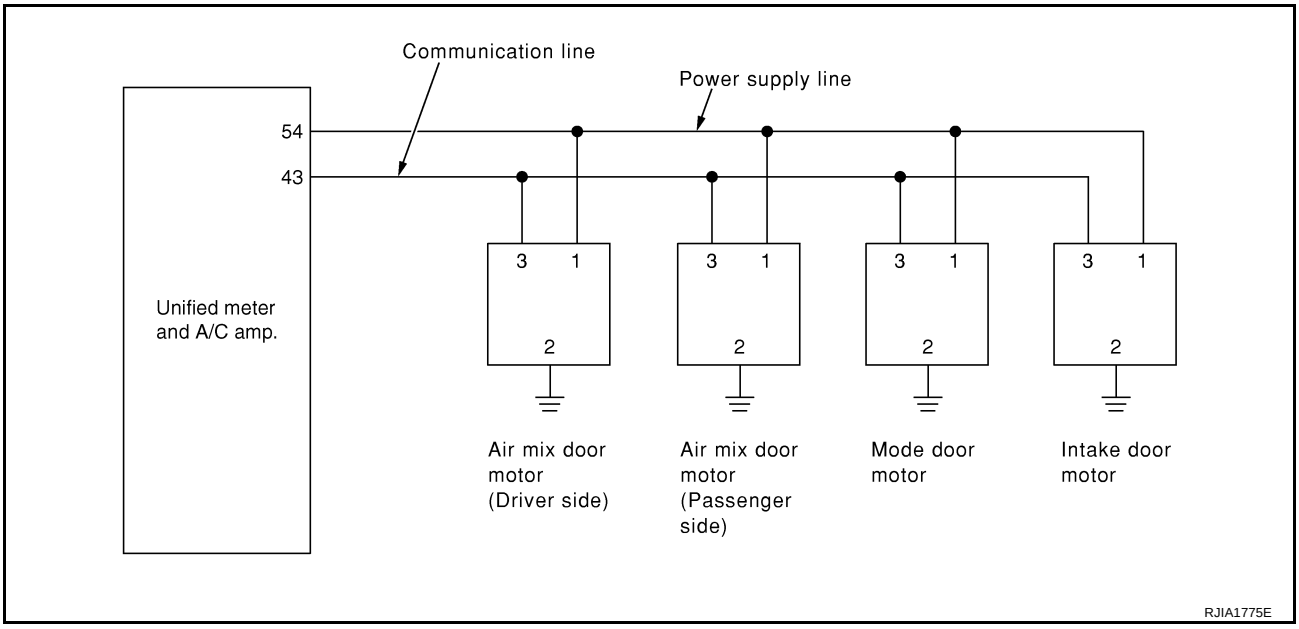

DIAGNOSIS PROCEDURE FOR LAN CIRCUIT

1. CHECK POWER SUPPLY FOR UNIFIED METER AND A/C AMP.

1. Turn ignition switch ON.
2. Check voltage between unified meter and A/C amp. harness connector M57 terminal 54 (Y/R) and ground.

54 – Ground : Battery voltage

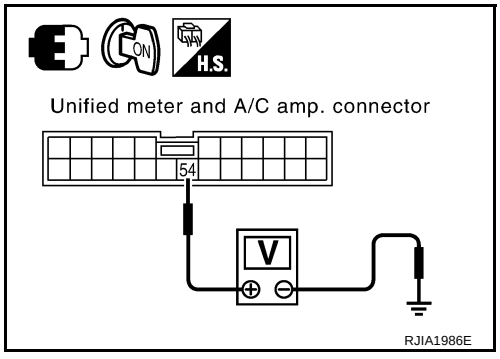

OK or NG

OK >> GO TO 2.
NG >> Replace unified meter and A/C amp.

2. CHECK SIGNAL FOR UNIFIED METER AND A/C AMP.

Confirm A/C LAN signal between unified meter and A/C amp. harness connector M57 terminal 43 (G/B) and ground using an oscilloscope.

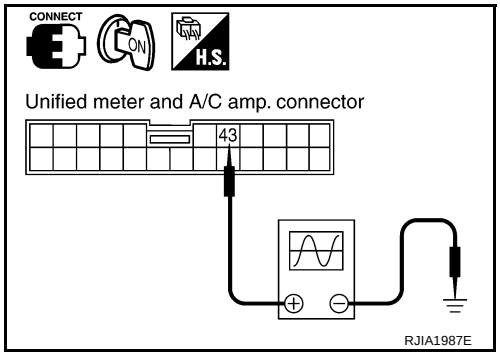

Terminals			Voltage
(+)		(–)	
Unified meter and A/C amp. connector	Terminal No. (wire color)		
M57	43 (G/B)	Ground	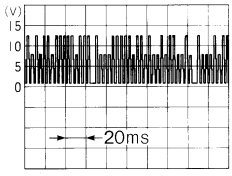 HAK0652D

OK or NG

OK >> GO TO 3.
NG >> Replace unified meter and A/C amp.

3. CHECK POWER SUPPLY FOR EACH DOOR MOTOR

Check voltage between each door motor harness connector terminal 1 and ground.

1 – Ground : Battery voltage

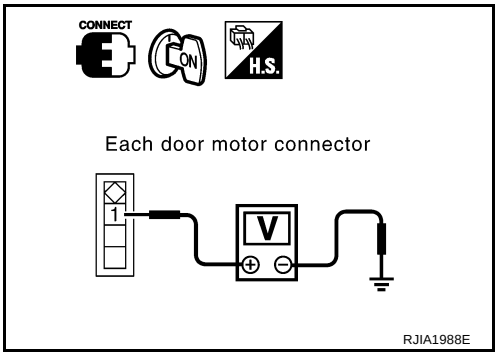

OK or NG

OK >> GO TO 4.
NG >> Repair harness or connector.

4. CHECK SIGNAL FOR EACH DOOR MOTOR

Confirm A/C LAN signal between each door motor harness connector terminal 3 and ground using an oscilloscope.

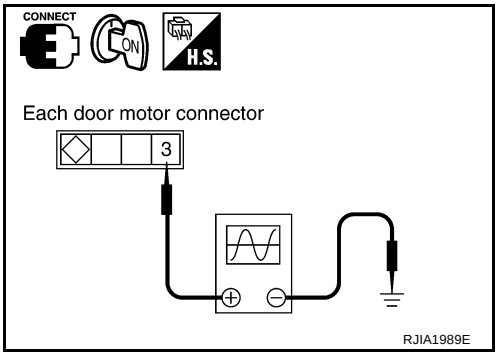

Door motor	Terminals (+) Connector	Terminals (+) Terminal No. (wire color)	Terminals (–)	Voltage
Mode	M258	3 (L)	Ground	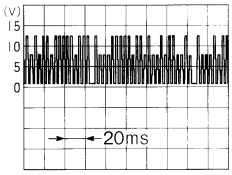 HAK0652D
Air mix (Driver side)	M252	3 (L)		
Air mix (Passenger side)	M257	3 (L)		
Intake	M253	3 (L)		

OK or NG

OK >> GO TO 5.
NG >> Repair harness or connector.

5. CHECK MOTOR GROUND CIRCUIT

1. Turn ignition switch OFF.
2. Disconnect each door motor connector.
3. Check continuity between each door motor harness connector terminal 2 and ground.

2 – Ground : Continuity should exist.

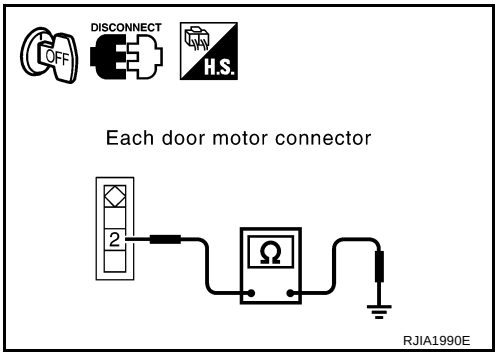

OK or NG

OK >> GO TO 6.
NG >> Repair harness or connector.

6. CHECK MOTOR OPERATION

1. Turn ignition switch OFF.
2. Disconnect each door motor connector.
3. Reconnect each door motor connector.
4. Turn ignition switch ON.
5. Confirm operation of each door motor.

OK or NG

OK >> (Return to operate normally.)
- Poor contact in motor connector.

NG >> (Does not operate normally.)
- GO TO 7.

7. CHECK OPERATION OF AIR MIX DOOR MOTOR AND INTAKE DOOR MOTOR

1. Turn ignition switch OFF.
2. Disconnect mode, air mix (driver side, passenger side), and intake door motor connectors.
3. Reconnect air mix (driver side, passenger side) and intake door motor connectors.
4. Turn ignition switch ON.
5. Confirm operation of air mix door motor (driver side, passenger side) and intake door motor.

OK or NG

OK >> [Air mix (driver side, passenger side) and intake door motors operate normally.]
- Replace mode door motor.

NG >> [Air mix (driver side, passenger side) and intake door motors does not operate normally.]
- GO TO 8.

8. CHECK OPERATION OF MODE DOOR MOTOR AND INTAKE DOOR MOTOR

1. Turn ignition switch OFF.
2. Disconnect air mix door motor (driver side, passenger side) connectors.
3. Reconnect mode door motor connector.
4. Turn ignition switch ON.
5. Confirm operation of mode door motor and intake door motor.

OK or NG

OK >> (Mode and intake door motors operate normally.)
- GO TO 10.

NG >> (Mode and intake door motors does not operate normally.)
- GO TO 9.

9. CHECK OPERATION OF MODE DOOR MOTOR AND AIR MIX DOOR MOTOR

1. Turn ignition switch OFF.
2. Disconnect intake door motor connector.
3. Reconnect air mix door motor (driver side, passenger side) connectors.
4. Turn ignition switch ON.
5. Confirm operation of mode door motor and air mix door motor (driver side, passenger side).

OK or NG

OK >> [Mode and air mix door motor (driver side, passenger side) operate normally.]
- Replace intake door motor.

NG >> [Mode and air mix door motor (driver side, passenger side) does not operate normally.]
- Replace display and A/C auto amp.

10. CHECK OPERATION OF AIR MIX DOOR MOTOR

1. Turn ignition switch OFF.
2. Disconnect air mix door motor (driver side) connector.
3. Turn ignition switch ON.
4. Confirm operation of air mix door motor (passenger side).

OK or NG

OK >> [Air mix door motor (passenger side) operates normally.]
- Replace air mix door motor (driver side).

NG >> [Air mix door motor (passenger side) does not operate normally.]
- Replace air mix door motor (passenger side).

Mode Door Motor Circuit

AJS0014T

SYMPTOM:

- Air outlet does not change.
- Mode door motor does not operate normally.

INSPECTION FLOW

1. Confirm symptom by performing the following operational check.

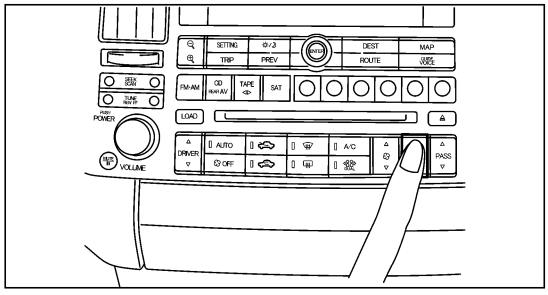

OPERATIONAL CHECK – Discharge air

a. Press mode switch and DEF switch.
b. Each position indicator should change shape.

Discharge air flow

Mode door position	Air outlet/distribution		
	Vent	Foot	Defroster
	100%	–	–
	58%	42%	–
	25%	75%	–
	14%	46%	40%
	–	–	100%

c. Confirm that discharge air comes out according to the air distribution table at left.
Refer to “Discharge Air Flow” (*1).

NOTE:

- **If OK (symptom cannot be duplicated), perform complete operational check (*2).**
  If NG (symptom is confirmed), continue with STEP-2 following.
- **Confirm that the compressor clutch is engaged (visual inspection) and intake door position is at FRESH when DEF or D/F is selected.**

2. Check for any service bulletins.
3. Perform self-diagnosis STEP-2. (*4) — NG → Go to appropriate malfunctioning sensor circuit. (*9)
   OK
4. Perform self-diagnosis STEP-3. (*4) — NG → Go to DIAGNOSTIC PROCEDURE FOR LAN SYSTEM CIRCUIT. (*10)
   OK
5. Perform self-diagnosis STEP-4. (*4) — NG → Check mode door control linkage. (*11) — NG → Repair or adjust control linkage.
   OK **[Cause cannot be confirmed by self-diagnosis.]**
6. Check ambient sensor circuit. (*5)
   OK
7. Check in-vehicle sensor circuit. (*6)
   OK
8. Check sunload sensor circuit. (*7)
   OK
9. Check intake sensor circuit. (*3)
   OK
10. Check air mix door motor circuit. (*8) — OK →

If the symptom still exists, perform a complete operational check (*2) and check for other symptoms.
[Refer to symptom table, (*12).]
Does another symptom exist?

- YES → Go to Trouble Diagnosis for related symptoms. **[Another symptom exists.]**
- NO → Replace unified meter and A/C amp. → INSPECTION END

RJIA1991E

*1	ATC-37, "Discharge Air Flow"	*2	ATC-61, "Operational Check"	*3	ATC-113, "Intake Sensor Circuit"
*4	ATC-54, "FUNCTION CONFIRMATION PROCEDURE", see No. 4 to 6.	*5	ATC-104, "Ambient Sensor Circuit"	*6	ATC-107, "In-vehicle Sensor Circuit"
*7	ATC-110, "Sunload Sensor Circuit"	*8	ATC-73, "Air Mix Door Motor Circuit"	*9	ATC-54, "FUNCTION CONFIRMATION PROCEDURE", see No. 13.
*10	ATC-66, "DIAGNOSIS PROCEDURE FOR LAN CIRCUIT"	*11	ATC-131, "MODE DOOR MOTOR"	*12	ATC-42, "SYMPTOM TABLE"

SYSTEM DESCRIPTION

Component Parts

Mode door control system components are:

- Unified meter and A/C amp.
- Mode door motor (LCU)
- A/C LAN system (PBR built-in mode door motor, air mix door motor and intake door motor)
- In-vehicle sensor
- Ambient sensor
- Sunload sensor
- Intake sensor

System Operation

The unified meter and A/C amp. receives data from each of the sensors. The unified meter and A/C amp. sends air mix door, mode door and intake door opening angle data to the air mix door motor LCU, mode door motor LCU and intake door motor LCU.

The air mix door motor, mode door motor and intake door motor read their respective signals according to the address signal. Opening angle indication signals received from the unified meter and A/C amp. and each of the motor position sensors are compared by the LCUs in each door motor with the existing decision and opening angles. Subsequently, HOT/COLD, DEF/VENT and FRESH/RECIRCULATION operation is selected. The new selection data are returned to the unified meter and A/C amp.

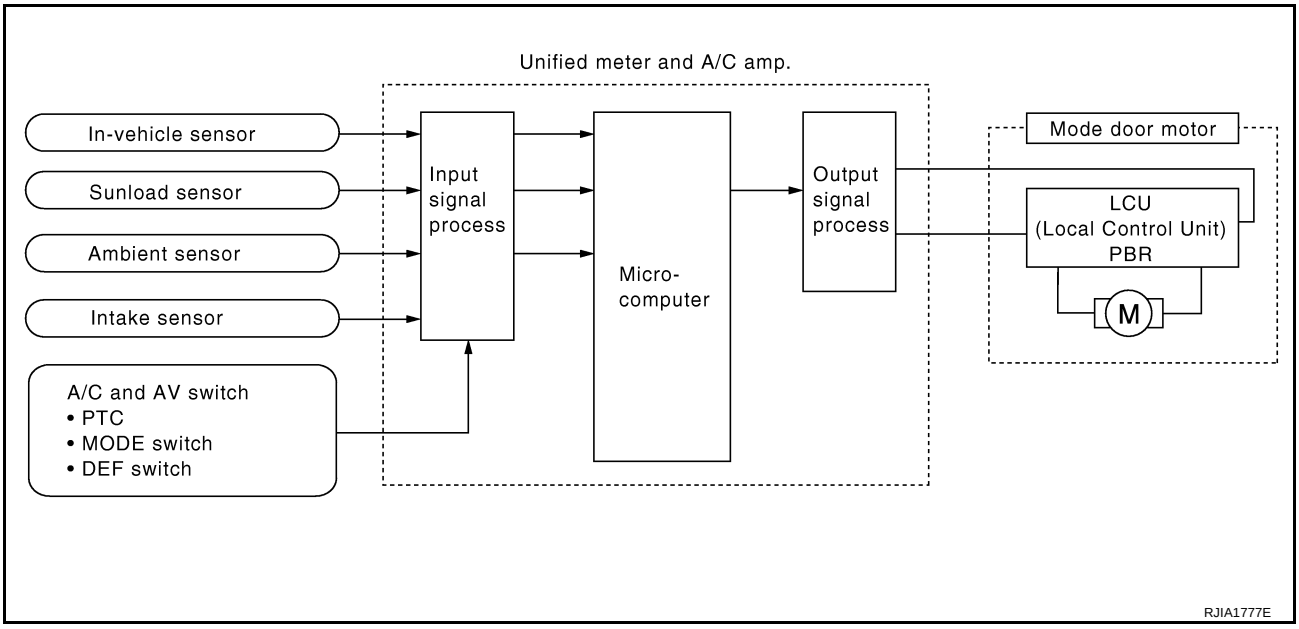

Mode Door Control Specification

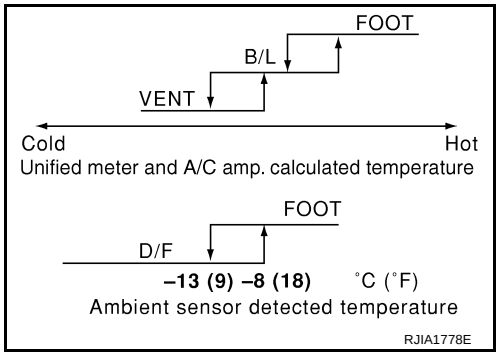

COMPONENT DESCRIPTION

Mode Door Motor

The mode door motor is attached to the heater & cooling unit. It rotates so that air is discharged from the outlet set by the unified meter and A/C amp. Motor rotation is conveyed to a link which activates the mode door.

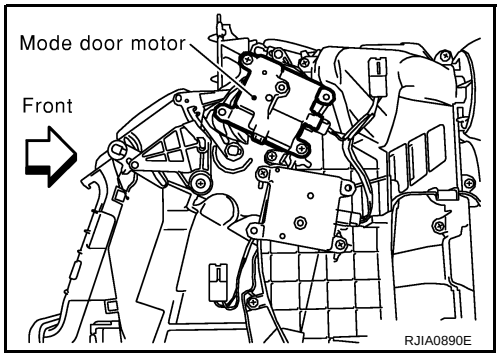

DIAGNOSIS PROCEDURE FOR MODE DOOR MOTOR

SYMPTOM: Mode door motor does not operate normally.
Perform diagnosis procedure. Refer to ATC-66, "DIAGNOSIS PROCEDURE FOR LAN CIRCUIT" .

Air Mix Door Motor Circuit

AJS0014U

SYMPTOM:

- Discharge air temperature does not change.
- Air mix door motor does not operate normally.

INSPECTION FLOW

1. Confirm symptom by performing the following operational check.

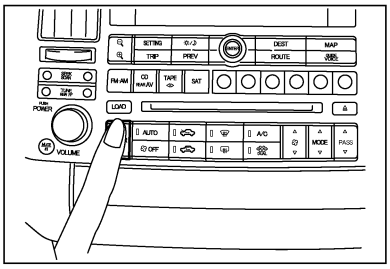

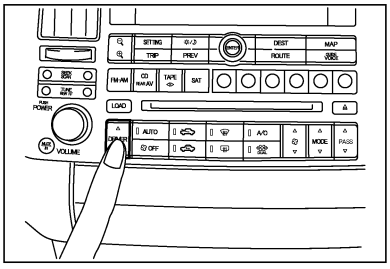

OPERATIONAL CHECK

Temperature increase

a. Press temperature (UP) switch (driver side) until 32˚C (90˚F) is displayed.
b. Check for hot air at discharge air outlets.

Temperature decrease

a. Press temperature (DOWN) switch (driver side) until 18˚C (60˚F) is displayed.
b. Check for cold air at discharge air outlets.

If OK (symptom cannot be duplicated), perform complete operational check (*8).
If NG (symptom is confirmed), continue with STEP-2 following.

2. Check for any service bulletins.

3. Perform self-diagnosis STEP-2. (*1)
- NG → Go to appropriate malfunctioning sensor circuit. (*6)
- OK ↓

4. Perform self-diagnosis STEP-4. (*1)
- OK **[Cause cannot be confirmed by self-diagnosis.]** ↓
- NG → Check air mix door motor. (*5)
  - OK → Go to LAN system circuit. (*7)
  - NG → Replace air mix door.

5. Check ambient sensor circuit. (*2) ↓ OK

6. Check in-vehicle sensor circuit. (*3) ↓ OK

7. Check sunload sensor circuit. (*4) ↓ OK

8. Check intake sensor circuit. (*10) ↓ OK

9. Check air mix door motor circuit. (*5) ↓ OK

If the symptom still exists, perform a complete operational check (*8) and check for other symptoms. [Refer to symptom table, (*9).] Does another symptom exist?
- YES → Go to Trouble Diagnosis for related symptom. **Another symptom exists.**
- NO ↓

Replace Unified meter and A/C amp. → INSPECTION END

SJIA0546E

*1 ATC-54, "FUNCTION CONFIRMATION PROCEDURE", see No. 4 to 6.
*2 ATC-104, "Ambient Sensor Circuit"
*3 ATC-107, "In-vehicle Sensor Circuit"
*4 ATC-110, "Sunload Sensor Circuit"
*5 ATC-73, "Air Mix Door Motor Circuit"
*6 ATC-54, "FUNCTION CONFIRMATION PROCEDURE", see No. 13.
*7 ATC-66, "LAN System Circuit".
*8 ATC-61, "Operational Check"
*9 ATC-42, "SYMPTOM TABLE"
*10 ATC-113, "Intake Sensor Circuit"

SYSTEM DESCRIPTION

Component Parts

Air mix door control system components are:

- Unified meter and A/C amp.
- Air mix door motor (LCU)
- A/C LAN system (PBR built-in mode door motor, air mix door motor and intake door motor)
- In-vehicle sensor
- Ambient sensor
- Sunload sensor
- Intake sensor

System Operation

The unified meter and A/C amp. receives data from each of the sensors. The unified meter and A/C amp. sends air mix door, mode door and intake door motor opening angle data to the air mix door motor LCU, mode door motor LCU and intake door motor LCU.

The air mix door motor, mode door motor and intake door motor read their respective signals according to the address signal. Opening angle indication signals received from the unified meter and A/C amp. and each of the motor position sensors are compared by the LCUs in each door motor with the existing decision and opening angles. Subsequently, HOT/COLD, DEF/VENT and FRESH/RECIRCULATION operation is selected. The new selection data are returned to the unified meter and A/C amp.

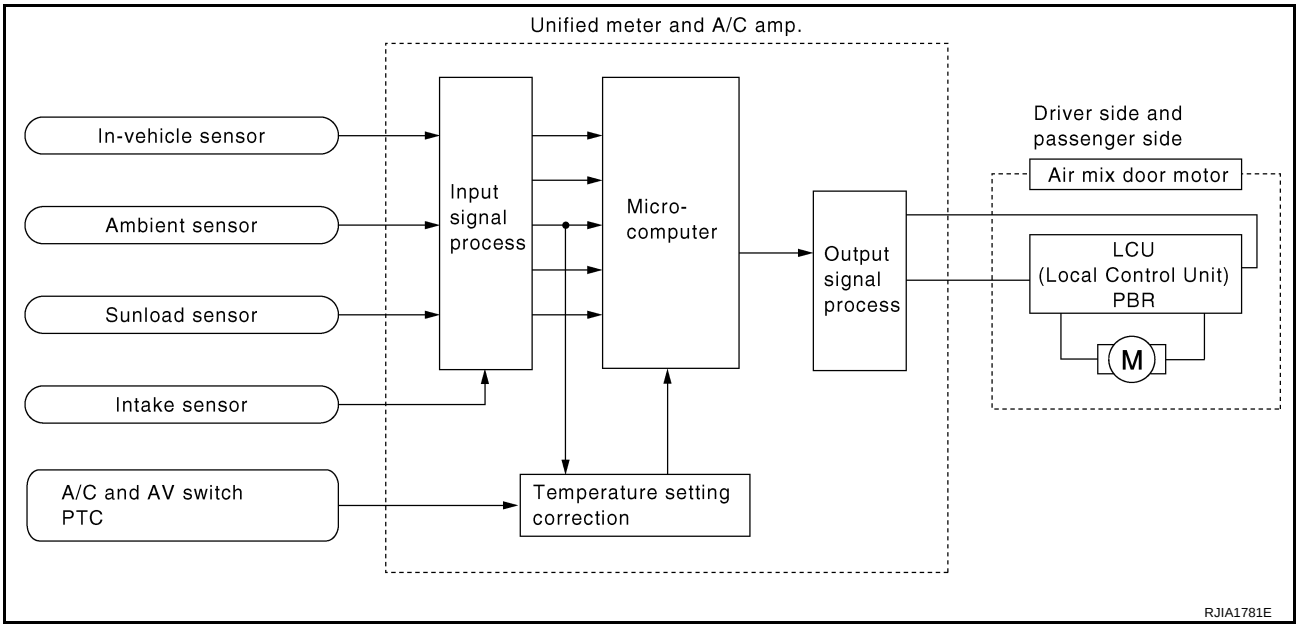

Air Mix Door Control Specification

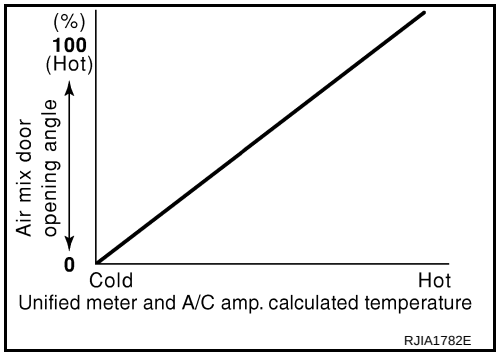

COMPONENT DESCRIPTION

Air Mix Door Motor

The air mix door motor is attached to the heater & cooling unit. It rotates so that the air mix door is opened or closed to a position set by the unified meter and A/C amp. Motor rotation is then sent conveyed through a shaft and the air mix door position feedback is then sent to the unified meter and A/C amp. by PBR built-in air mix door motor.

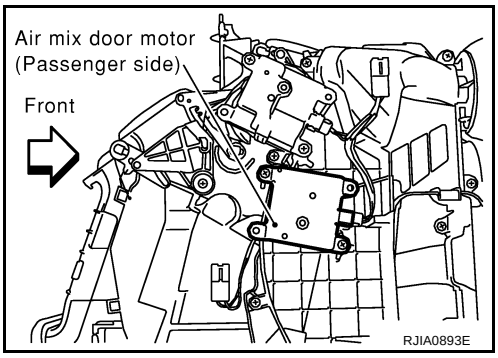

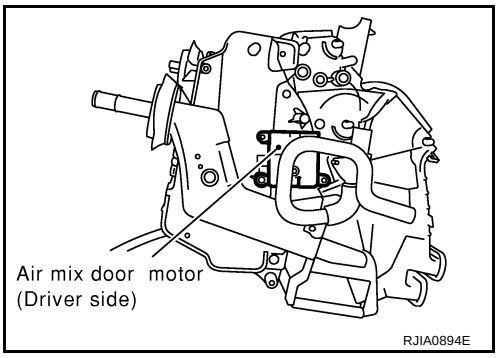

DIAGNOSIS PROCEDURE FOR AIR MIX DOOR MOTOR

SYMPTOM: Discharge air temperature does not change.
Perform diagnosis procedure. Refer to ATC-66, "DIAGNOSIS PROCEDURE FOR LAN CIRCUIT" .

Air Mix Door Motor PBR Circuit

AJS0014V

SYMPTOM:

- Discharge air temperature does not change.
- PBR circuit is open or shorted.

DIAGNOSIS PROCEDURE FOR AIR MIX DOOR MOTOR PBR

Perform diagnosis procedure. Refer to ATC-66, "DIAGNOSIS PROCEDURE FOR LAN CIRCUIT" .

Intake Door Motor Circuit

AJS0014W

SYMPTOM:

- Intake door does not change.
- Intake door motor does not operate normally.

INSPECTION FLOW

1. Confirm symptom by performing the following operational check.

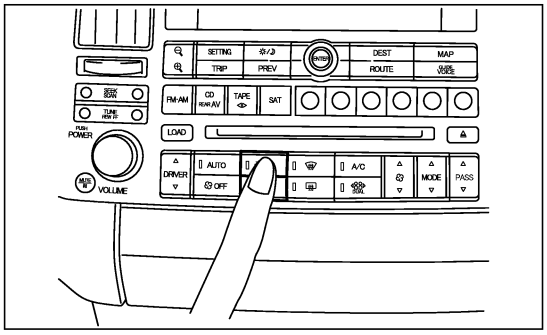

a. Press REC switch.
Recirculation indicator should illuminate.
b. Press FRE switch.
Fresh indicator should illminate.
c. Listen for intake door position change (slight change of blower sound can be heard).
If OK (symptom cannot be duplicated), perform complete operational check (*9).
If NG (symptom is confirmed), continue with STEP-2 following.

2. Check for any service bulletins.

3. Perform self-diagnosis STEP-2. (*1)
- NG → Go to appropriate malfunctioning sensor circuit. (*6)
- OK ↓

4. Perform self-diagnosis STEP-4. (*1)
- OK ↓
- NG → Check intake door control linkage. (*8)
  - OK → Go to LAN system circuit. (*7)
  - NG → Repair or adjust control linkage.

[Cause cannot be confirmed by self-diagnosis.]

5. Check ambient sensor circuit. (*2)
- OK ↓

6. Check in-vehicle sensor circuit. (*3)
- OK ↓

7. Check sunload sensor circuit. (*4)
- OK ↓

8. Check intake sensor circuit. (*11)
- OK ↓

9. Check air mix door motor circuit. (*5)
- OK ↓

If the symptom still exists, perform a complete operational check (*9) and check for other symptoms. [Refer to symptom table, (*10).] Does another symptom exist?
- NO → Replace unified meter and A/C amp. → INSPECTION END
- YES → Go To Trouble Diagnosis for related symptoms.

Another symptom exists.

RJIA1993E

*1 ATC-54, "FUNCTION CONFIRMATION PROCEDURE", see No. 4 to 6.	*2 ATC-104, "Ambient Sensor Circuit"	*3 ATC-107, "In-vehicle Sensor Circuit"
*4 ATC-110, "Sunload Sensor Circuit"	*5 ATC-73, "Air Mix Door Motor Circuit"	*6 ATC-54, "FUNCTION CONFIRMATION PROCEDURE", see No. 13.
*7 ATC-66, "LAN System Circuit"	*8 ATC-124, "INTAKE DOOR MOTOR"	*9 ATC-61, "Operational Check"
*10 ATC-42, "SYMPTOM TABLE"	*11 ATC-113, "Intake Sensor Circuit"	

SYSTEM DESCRIPTION

Component Parts

Intake door control system components are:

- Unified meter and A/C amp.
- Intake door motor (LCU)
- A/C LAN system (PBR built-in mode door motor, air mix door motor and intake door motor)
- In-vehicle sensor
- Ambient sensor
- Sunload sensor
- Intake sensor

System Operation

The intake door control determines intake door position based on the ambient temperature, the intake air temperature and the in-vehicle temperature. When the DEF, or OFF switches are pressed or A/C switch is OFF, the unified meter and A/C amp. sets the intake door at the FRESH position.

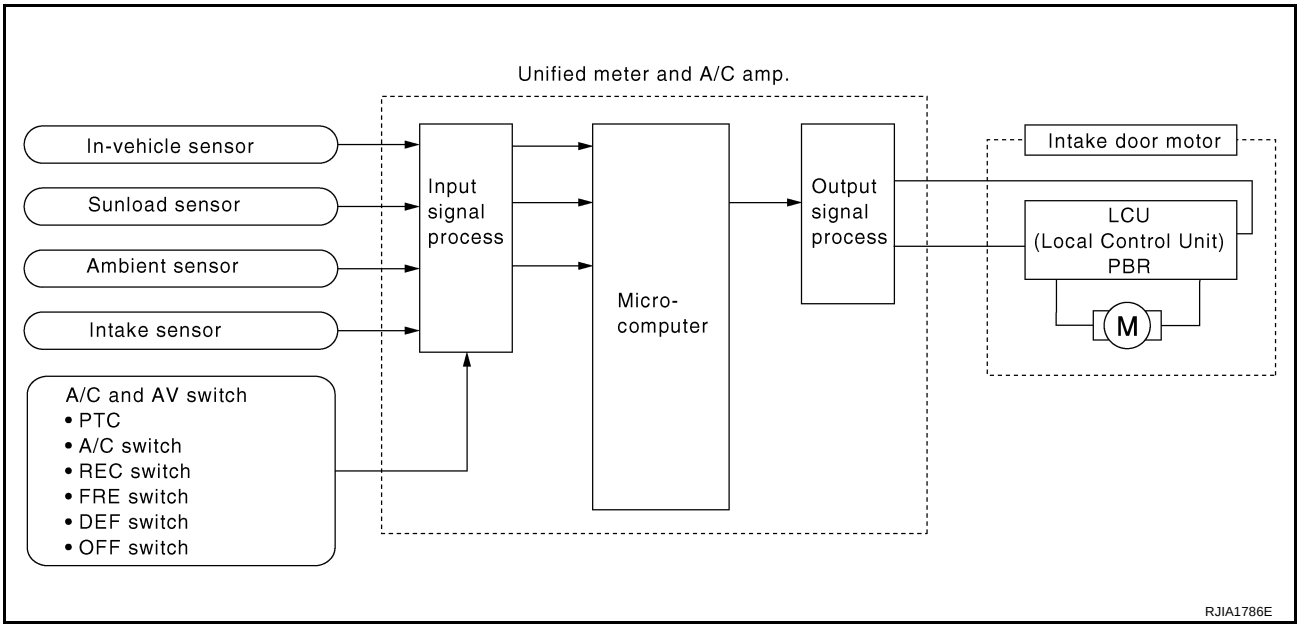

Intake Door Control Specification

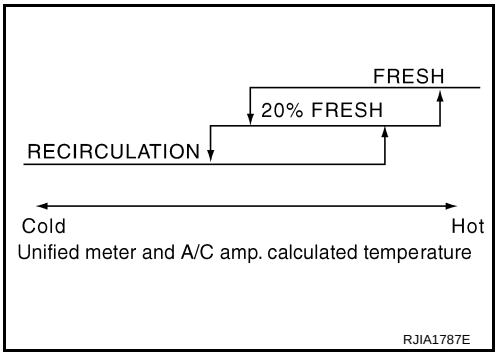

COMPONENT DESCRIPTION

Intake Door Motor

The intake door motor is attached to the blower unit. It rotates so that air is drawn from inlets set by the unified meter and A/C amp. Motor rotation is conveyed to a lever which activates the intake door.

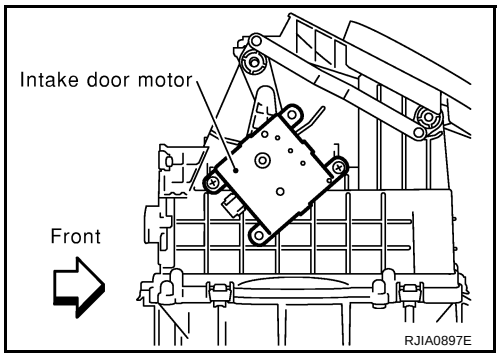

DIAGNOSIS PROCEDURE FOR INTAKE DOOR MOTOR

SYMPTOM: Intake door motor does not operate normally.
Perform diagnosis procedure. Refer to ATC-66, "DIAGNOSIS PROCEDURE FOR LAN CIRCUIT" .

Blower Motor Circuit

AJS0014X

SYMPTOM: Blower motor operation is malfunctioning.

INSPECTION FLOW

1. Confirm symptom by performing the following operational check.

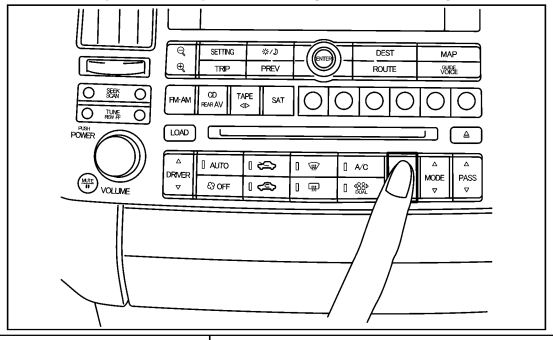

OPERATIONAL CHECK - Blower

a. Press fan control (UP) switch.
Blower should operate on low speed.

b. Press fan control (UP) switch,
and continue checking blower speed and fan symbol until all speeds are checked.

If OK (symptom cannot be duplicated), perform complete operational check (*1).
If NG (symptom is confirmed), continue with STEP-2 following.

2. Check for any service bulletins.

3. Perform self-diagnosis STEP-2. (*3)
Code No. 20 should be displayed after approx. 25 seconds.

NG → Go to appropriate malfunctioning sensor circuit. (*5)

OK ↓

4. Perform self-diagnosis STEP-4. (*4)
Does blower motor speed change according to each code No.?

Code No.	41	42	43	44	45	46
Blower motor duty ratio	37%	91%	65%			91%

NO → Go to Blower Motor Circuit. (*6)

YES ↓

5. Is engine coolant temperature below 56˚C (133˚F)?

NO → Blower motor operation is normal.

YES ↓

6. Is blower motor operating under starting blower speed control?

NO → Go to Blower Motor Circuit. (*6) → OK → Check engine coolant temperature sensor circuit. (*11)

YES **[Cause cannot be confirmed by self-diagnosis.]** ↓

7. Check ambient sensor circuit. (*8)

OK ↓

8. Check in-vehicle sensor circuit. (*9)

OK ↓

9. Check sunload sensor circuit. (*10)

OK ↓

10. Check intake sensor circuit. (*2)

OK ↓

If the symptom still exists, perform a complete operational check (*1) and check for other symptoms. [Refer to symptom table, (*7).] Does another symptom exist?

YES → Go to Trouble Diagnosis for related symptom.
Another symptom exists.

NO ↓

Replace unified meter and A/C amp. → INSPECTION END

RJIA1994E

*1	ATC-61, "Operational Check"	*2	ATC-113, "Intake Sensor Circuit"	*3	ATC-54, "FUNCTION CONFIRMATION PROCEDURE", see No.4.
*4	ATC-54, "FUNCTION CONFIRMATION PROCEDURE", see No.6.	*5	ATC-54, "FUNCTION CONFIRMATION PROCEDURE", see No.13.	*6	ATC-81, "DIAGNOSIS PROCEDURE FOR BLOWER MOTOR"
*7	ATC-42, "SYMPTOM TABLE"	*8	ATC-104, "Ambient Sensor Circuit"	*9	ATC-107, "In-vehicle Sensor Circuit"
*10	ATC-110, "Sunload Sensor Circuit"	*11	EC-208, "DTC P0117, P0118 ECT SENSOR" (VQ35DE) or EC-914, "DTC P0117, P0118 ECT SENSOR" (VK45DE)		

SYSTEM DESCRIPTION

Component Parts

Fan speed control system components are:

- Unified meter and A/C amp.
- A/C LAN system (PBR built-in mode door motor, air mix door motor and intake door motor)
- In-vehicle sensor
- Ambient sensor
- Sunload sensor
- Intake sensor

System Operation

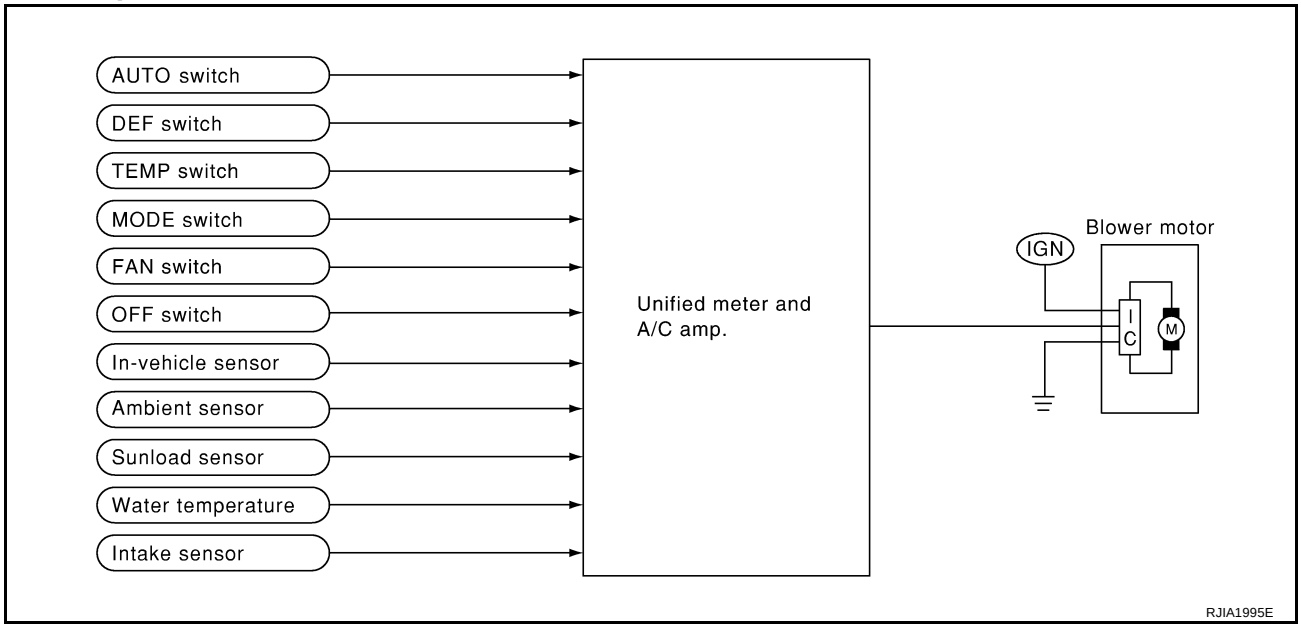

Automatic Mode

In the automatic mode, the blower motor speed is calculated by the unified meter and A/C amp. based on the input from the PBR, in-vehicle sensor, sunload sensor, intake sensor and ambient sensor.
When the air flow is increased, the duty ratio of the blower fan motor's drive signal is changed at 8%/sec. to prevent a sudden increase in air flow.
In addition to manual air flow control and the usual automatic air flow control, starting air flow control, low water temperature starting control and high passenger compartment temperature starting control are available.

Starting Fan Speed Control

Start up from COLD SOAK Condition (Automatic mode)
In a cold start up condition where the engine coolant temperature is below 56°C (133°F), the blower will not operate for a short period of time (up to 150 seconds). The exact start delay time varies depending on the ambient and engine coolant temperature.
In the most extreme case (very low ambient) the blower starting delay will be 150 seconds as described above. After this delay, the blower will operate at low speed until the engine coolant temperature rises above 56°C (133°F), and then the blower speed will increase to the objective speed.
Start up from usual or HOT SOAK Condition (Automatic mode)
The blower will begin operation momentarily after the AUTO switch is pushed. The blower speed will gradually rise to the objective speed over a time period of 3 seconds or less (actual time depends on the objective blower speed).

Blower Speed Compensation

Sunload
When the in-vehicle temperature and the set temperature are very close, the blower will be operating at low speed. The low speed will vary depending on the sunload. During conditions of low or no sunload, the blower speed is at duty ratio 25%. During high sunload conditions, the unified meter and A/C amp. raise the blower speed (duty ratio 49%).

Fan Speed Control Specification

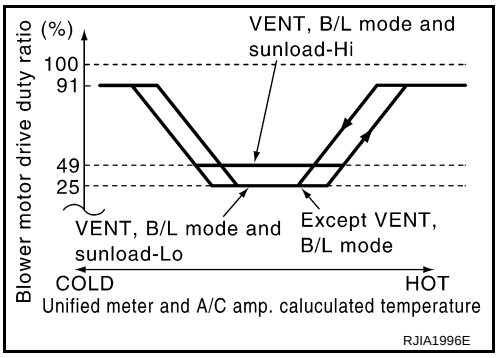

COMPONENT DESCRIPTION

Brush-Less Motor

The blower motor utilizes a brush-less motor with a rotating magnet. Quietness is improved over previous motors where the brush was the point of contact and the coil rotated.

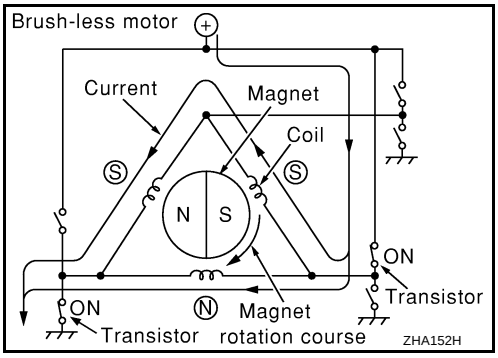

DIAGNOSIS PROCEDURE FOR BLOWER MOTOR

SYMPTOM: Blower motor operation is malfunctioning.

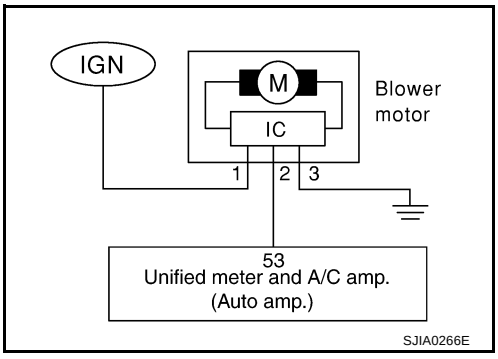

1. CHECK POWER SUPPLY FOR BLOWER MOTOR

1. Disconnect blower motor connector.
2. Turn ignition switch ON.
3. Check voltage between blower motor harness connector M78 terminal 1 (L/W) and ground.

1 – Ground : Battery voltage

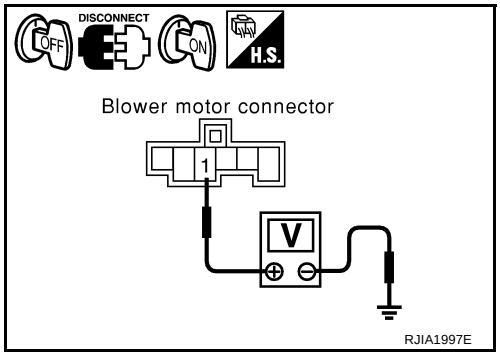

OK or NG

OK >> GO TO 2.
NG >> Check power supply circuit and 15 A fuses [Nos. 10 and 11, located in the fuse block (J/B)]. Refer to PG-82, "FUSE BLOCK - JUNCTION BOX (J/B)" .

- If fuses are OK, check harness for open circuit. Repair or replace if necessary.
- If fuses are NG, replace fuse and check harness for short circuit. Repair or replace if necessary.

2. CHECK BLOWER MOTOR GROUND CIRCUIT

1. Turn ignition switch OFF.
2. Check continuity between blower motor harness connector M78 terminal 3 (B) and ground.

3 – Ground : Continuity should exist.

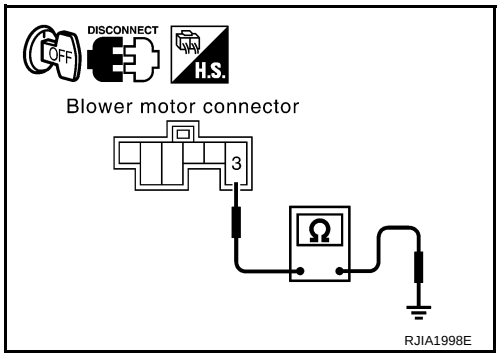

OK or NG

OK >> GO TO 3.
NG >> Repair harness or connector.

3. CHECK CIRCUIT CONTINUITY BETWEEN BLOWER MOTOR AND UNIFIED METER AND A/C AMP.

1. Disconnect unified meter and A/C amp. connector.
2. Check continuity between blower motor harness connector M78 terminal 2 (G) and unified meter and A/C amp. harness connector M57 terminal 53 (G).

2 – 53 : Continuity should exist.

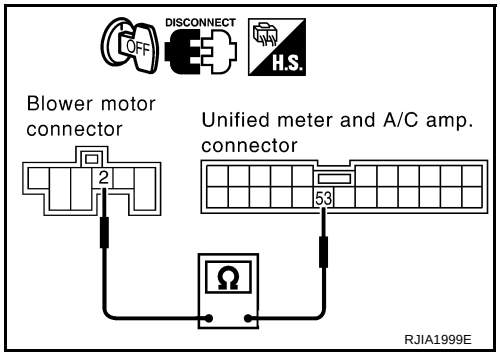

OK or NG

OK >> GO TO 4.
NG >> Repair harness or connector.

4. CHECK UNIFIED METER AND A/C AMP. OUTPUT SIGNAL

1. Reconnect blower motor connector and unified meter and A/C amp. connector.
2. Turn ignition switch ON.

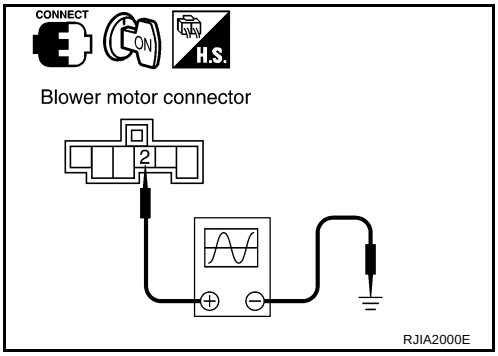

3. Change the fan speed from Lo to Hi, and check the duty ratios between blower motor harness connector M78 terminal 2 (G) and ground using an oscilloscope. Normal terminal 2 (G) drive signal duty ratios are shown in the table below.

Blower fan speed	1st	2nd	3rd	4th	5th	6th	7th
Blower motor connector M78 terminal No. 2 (Oscilloscope)	T1 Approx. 1.6 ms	T2 Approx. 1.6 ms	T3 Approx. 1.6 ms	T4 Approx. 1.6 ms	T5 Approx. 1.6 ms	T6 Approx. 1.6 ms	T7 Approx. 1.6 ms
Duty ratio	Approx. 25%	Approx. 35%	Approx. 47%	Approx. 59%	Approx. 69%	Approx. 79%	Approx. 91%

NOTE: Duty ratio = $\frac{Tx}{\text{Approx. } 1.6 \text{ ms}} \times 100\ (\%)$

RJIA2001E

OK or NG

OK >> Replace blower motor after confirming the fan air flow does not change.
NG >> Replace unified meter and A/C amp.

COMPONENT INSPECTION

Blower Motor

Confirm smooth rotation of the blower motor.

- Ensure that there are no foreign particles inside the blower unit.

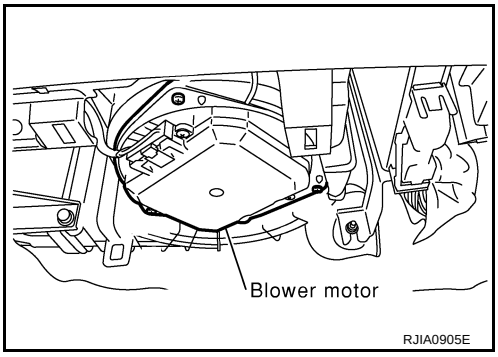

Magnet Clutch Circuit

AJS0014Y

SYMPTOM: Magnet clutch does not engage.

INSPECTION FLOW

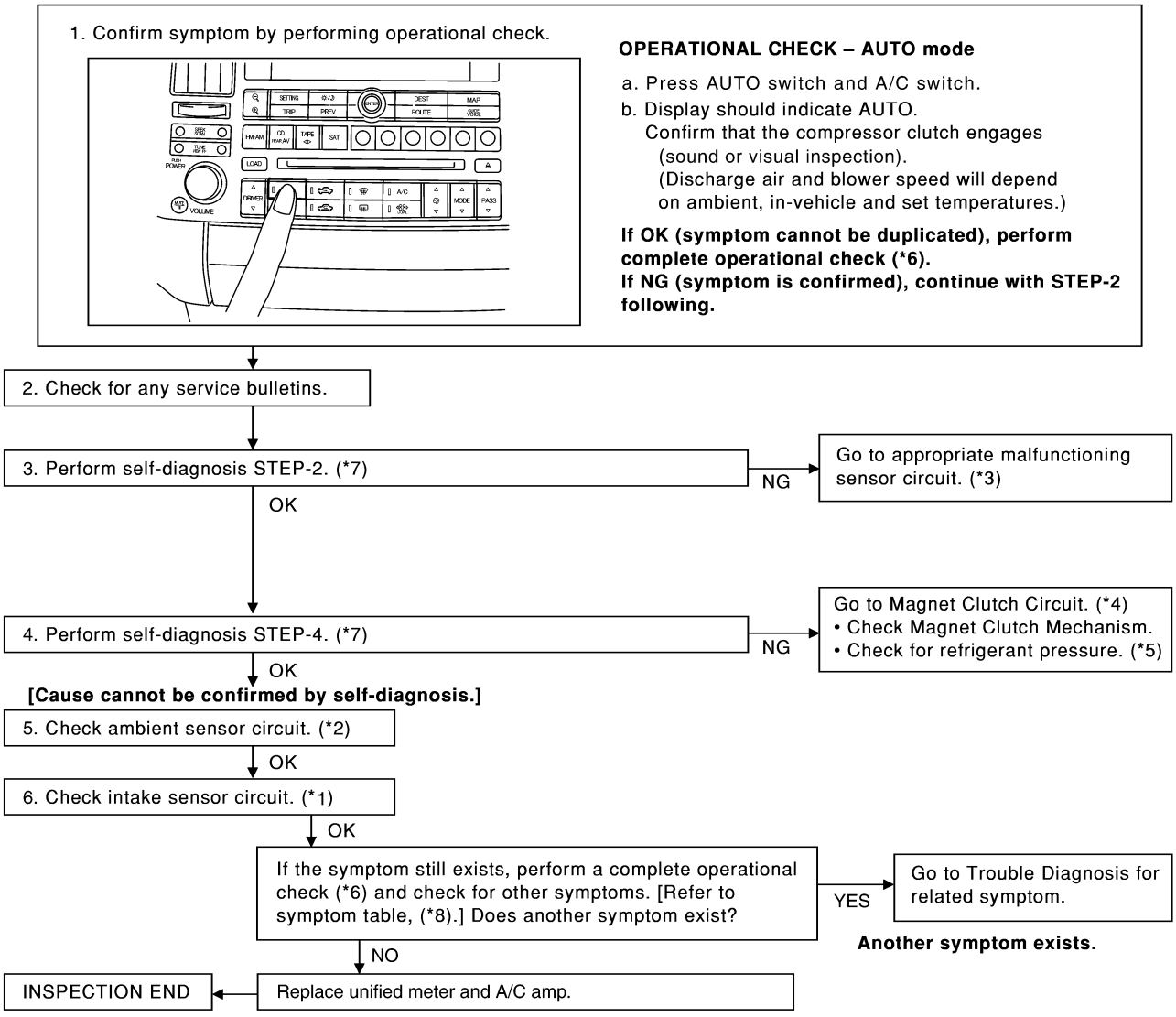

*1 ATC-113, "Intake Sensor Circuit"
*2 ATC-104, "Ambient Sensor Circuit"
*3 ATC-54, "FUNCTION CONFIRMATION PROCEDURE", see No. 13.
*4 ATC-85, "DIAGNOSIS PROCEDURE FOR MAGNET CLUTCH"
*5 ATC-96, "TROUBLE DIAGNOSIS FOR UNUSUAL PRESSURE"
*6 ATC-61, "Operational Check"
*7 ATC-54, "FUNCTION CONFIRMATION PROCEDURE", see No. 4 to 6.
*8 ATC-42, "SYMPTOM TABLE"

SYSTEM DESCRIPTION

Unified meter and A/C amp. controls compressor operation by ambient temperature, intake air temperature and signal from ECM.

Low Temperature Protection Control

Unified meter and A/C amp. will turn the compressor ON or OFF as determined by a signal detected by ambient sensor and intake sensor.

When ambient temperature is higher than –2°C (28°F), the compressor turns ON. The compressor turns OFF when ambient temperature is lower than –5°C (23°F).

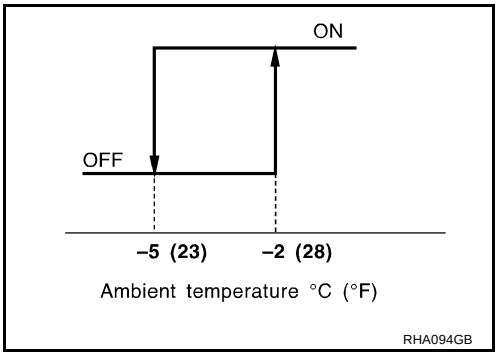

When intake air temperature is higher than 1°C (34°F), the compressor turns ON. The compressor turns OFF when intake air temperature is lower than –5°C (23°F).

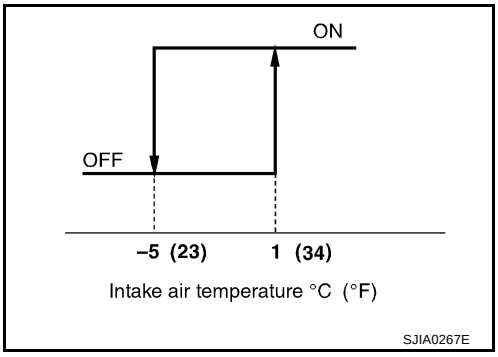

DIAGNOSIS PROCEDURE FOR MAGNET CLUTCH

SYMPTOM: Magnet clutch does not engage when A/C switch is ON.

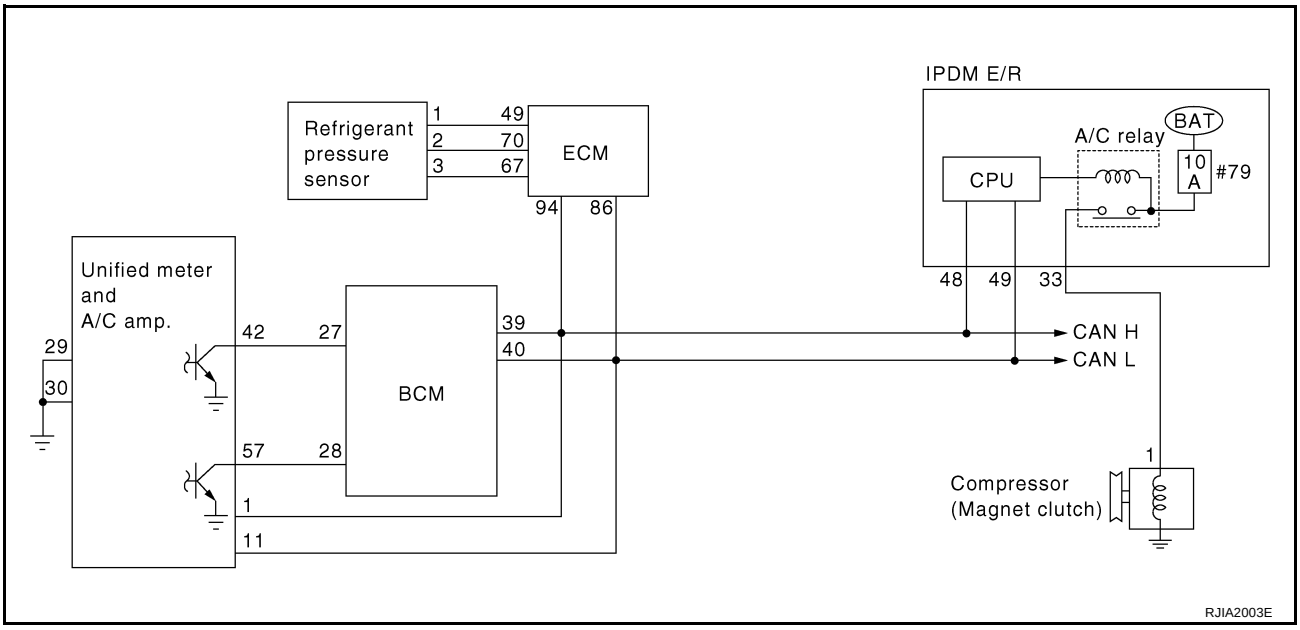

1. CHECK AMBIENT SENSOR AND INTAKE SENSOR CIRCUIT

Check ambient sensor and intake sensor. Refer to ATC-54, "FUNCTION CONFIRMATION PROCEDURE" , see No. 9 and 11.

OK or NG

OK >> GO TO 2.

NG >>
- Malfunctioning ambient sensor: Refer to ATC-104, "Ambient Sensor Circuit" .
- Malfunctioning intake sensor: Refer to ATC-113, "Intake Sensor Circuit" .

2. PERFORM AUTO ACTIVE TEST

Refer to PG-24, "Auto Active Test" .

Does the magnet clutch operate?

YES >>
- WITH CONSULT-II
  GO TO 5.
- WITHOUT CONSULT-II
  GO TO 6.

NO >> Check 10 A fuse (No. 79, located in IPDM E/R), and GO TO 3.

3. CHECK CIRCUIT CONTINUITY BETWEEN IPDM E/R AND COMPRESSOR

1. Turn ignition switch OFF.
2. Disconnect IPDM E/R connector and compressor connector.
3. Check continuity between IPDM E/R harness connector E8 terminal 33 (L) and compressor harness connector F2 terminal 1 (L).

33 – 1 : Continuity should exist.

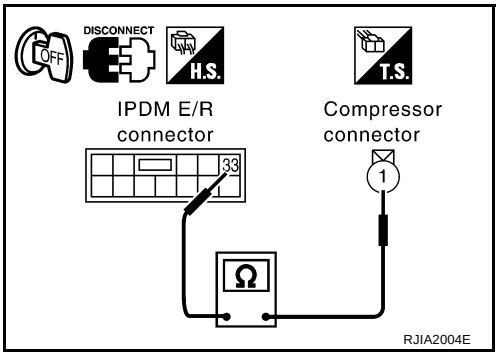

OK or NG

OK >> GO TO 4.

NG >> Repair harness or connector.

4. CHECK MAGNET CLUTCH CIRCUIT

Check for operation sound when applying battery voltage direct current to terminal.

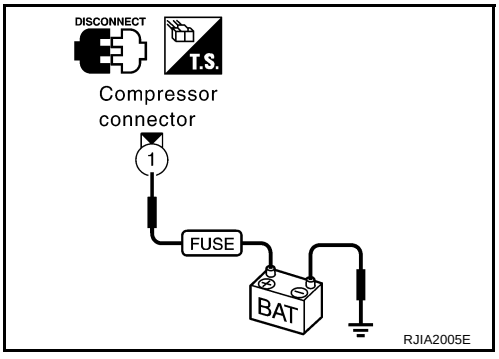

OK or NG

OK >>
1. Replace IPDM E/R.
2. Go to self-diagnosis procedure ATC-54, "FUNCTION CONFIRMATION PROCEDURE" and perform self-daignosis STEP-4. Confirm that magnet clutch operation usual.

NG >>
1. Replace magnet clutch. Refer to ATC-144, "Removal and Installation of Compressor Clutch" .
2. Go to self-diagnosis procedure ATC-54, "FUNCTION CONFIRMATION PROCEDURE" and perform self-daignosis STEP-4. Confirm that magnet clutch operation usual.

5. CHECK BCM INPUT (COMPRESSOR ON) SIGNAL

Check compressor ON/OFF signal. Refer to ATC-40, "CONSULT-II Function (BCM)" .

A/C SW ON : **AIR COND SW ON**

A/C SW OFF : **AIR COND SW OFF**

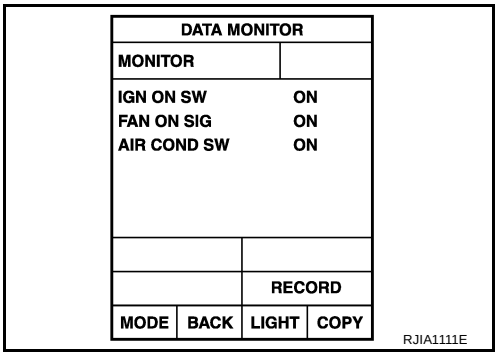

OK or NG

OK >> GO TO 8.
NG >> GO TO 6.

6. CHECK CIRCUIT CONTINUITY BETWEEN BCM AND UNIFIED METER AND A/C AMP.

1. Turn ignition switch OFF.
2. Disconnect BCM connector and unified meter and A/C amp. connector.
3. Check continuity between BCM harness connector M3 terminal 27 (R/Y) and unified meter and A/C amp. harness connector M57 terminal 42 (R/Y).

27 – 42 : **Continuity should exist.**

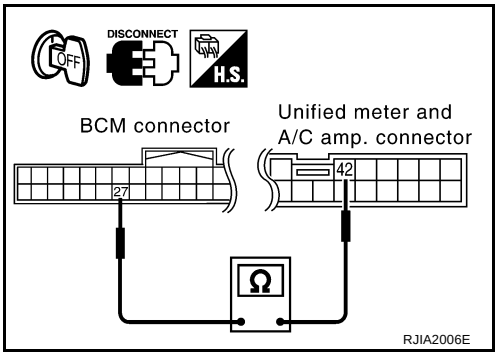

OK or NG

OK >> GO TO 7.
NG >> Repair harness or connector.

7. CHECK VOLTAGE FOR UNIFIED METER AND A/C AMP. (COMPRESSOR ON SIGNAL)

1. Reconnect BCM connector and unified meter and A/C amp. connector.
2. Turn ignition switch ON.
3. Check voltage between unified meter and A/C amp. harness connector M57 terminal 42 (R/Y) and ground.

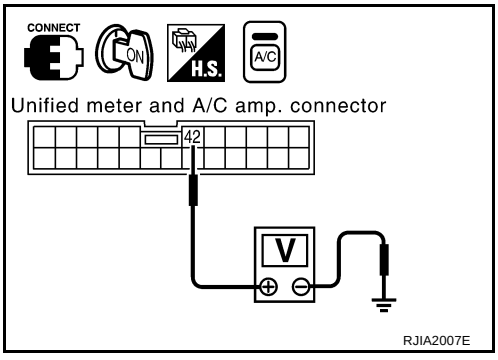

Terminals			Condition	Voltage
(+)		(–)		
Unified meter and A/C amp. connector	Terminal No. (wire color)			
M57	42 (R/Y)	Ground	A/C switch: ON (Blower motor operates.)	Approx. 0 V
			OFF switch: ON (A/C system: OFF)	Approx. 5 V

OK or NG

OK >> GO TO 8.
NG-1 >> If the voltage is approx. 5 V when A/C switch is ON: Replace unified meter and A/C amp.
NG-2 >> If the voltage is approx. 0 V when A/C switch is OFF: Replace BCM.

8. CHECK REFRIGERANT PRESSURE SENSOR

WITH CONSULT-II

1. Start the engine.
2. Check voltage of refrigerant pressure sensor. Refer to EC-147, "CONSULT-II Reference Value in Data Monitor" (VQ35DE) or EC-838, "CONSULT-II Reference Value in Data Monitor" (VK45DE).

WITHOUT CONSULT-II

1. Start the engine.
2. Check voltage between ECM harness connector F101 terminal 70 (L/R) and ground.

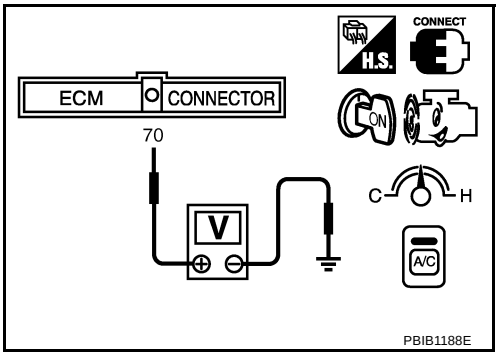

Terminals			Condition	Voltage
(+)		(−)		
ECM connector	Terminal No. (wire color)			
F101	70 (L/R)	Ground	A/C switch: ON (Blower motor operates.)	Approx. 1 - 4 V

OK or NG

OK >> ● WITH CONSULT-II
GO TO 9.
● WITHOUT CONSULT-II
GO TO 10.

NG >> Refer to EC-674, "REFRIGERANT PRESSURE SENSOR" (VQ35DE) or EC-1364, "REFRIGERANT PRESSURE SENSOR" (VK45DE).

9. CHECK BCM INPUT (FAN ON) SIGNAL

Check FAN ON/OFF signal. Refer to ATC-40, "CONSULT-II Function (BCM)" .

FAN SW ON **: FAN ON SIG ON**

FAN SW OFF **: FAN ON SIG OFF**

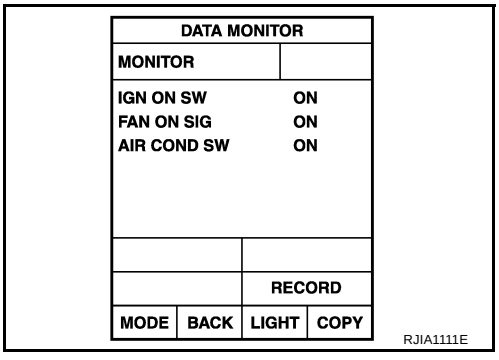

OK or NG

OK >> GO TO 12.
NG >> GO TO 10.

10. CHECK CIRCUIT CONTINUITY BETWEEN BCM AND UNIFIED METER AND A/C AMP.

1. Turn ignition switch OFF.
2. Disconnect BCM connector and unified meter and A/C amp. connector.
3. Check continuity between BCM harness connector M3 terminal 28 (BR/Y) and unified meter and A/C amp. harness connector M57 terminal 57 (BR/Y).

28 – 57 **: Continuity should exist.**

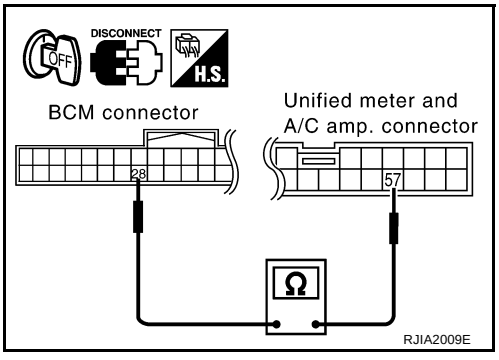

OK or NG

OK >> GO TO 11.
NG >> Repair harness or connector.

11. CHECK VOLTAGE FOR UNIFIED METER AND A/C AMP. (FAN ON SIGNAL)

1. Reconnect BCM connector and unified meter and A/C amp. connector.
2. Turn ignition switch ON.
3. Check voltage between unified meter and A/C amp. harness connector M57 terminal 57 (BR/Y) and ground.

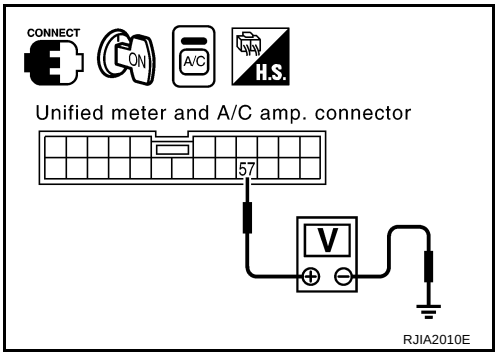

Terminals			Condition	Voltage
(+)		(-)		
Unified meter and A/C amp. connector	Terminal No. (wire color)			
M57	57 (BR/Y)	Ground	A/C switch: ON (Blower motor operates.)	Approx. 0 V
			OFF switch: ON (A/C system: OFF)	Approx. 5 V

OK or NG

OK >> GO TO 12.
NG-1 >> If the voltage is approx. 5 V when blower motor is ON: Replace unified meter and A/C amp.
NG-2 >> If the voltage is approx. 0 V when blower motor is OFF: Replace BCM. Refer to BCS-16, "Removal and Installation of BCM" .

12. CHECK CAN COMMUNICATION

Check CAN communication. Refer to BCS-15, "CAN Communication Inspection Using CONSULT-II (Self-Diagnosis)" .

- BCM – ECM
- ECM – IPDM E/R
- ECM – Unified meter and A/C amp.

OK or NG

OK >> INSPECTION END
NG >> Repair or replace malfunctioning part(s).

COMPONENT INSPECTION

Refrigerant Pressure Sensor

The refrigerant pressure sensor is attached to the condenser.
Make sure that the A/C refrigerant pressure and the sensor output voltage are within the specified range as shown in the A/C operating condition figure. Refer to EC-674, "REFRIGERANT PRESSURE SENSOR" (VQ35DE) or EC-1364, "REFRIGERANT PRESSURE SENSOR" (VK45DE).

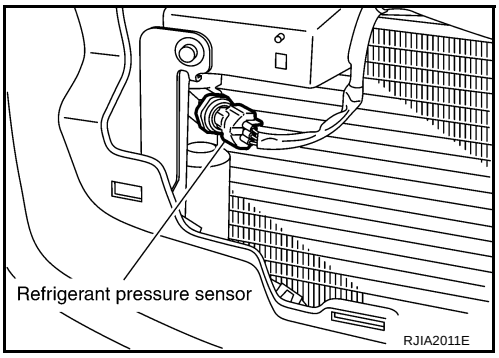

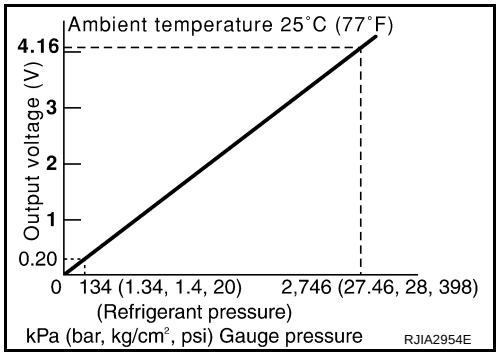

Insufficient Cooling

AJS0014Z

SYMPTOM: Insufficient cooling

INSPECTION FLOW

1. Confirm symptom by performing the following operational check.

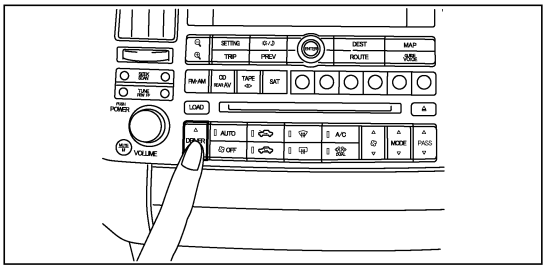

OPERATIONAL CHECK – Temperature decrease

a. Press temperature (DOWN) switch (driver side) until 18°C (60°F) is displayed.

b. Check for cold air at discharge air outlets.

If OK (symptom cannot be duplicated), perform complete operational check (*10).
If NG (symptom is confirmed), continue with STEP-2 following.

2. Check for any service bulletins.

3. Perform self-diagnosis STEP-2. (*1)
   - NG → Go to appropriate malfunctioning sensor circuit. (*5)
   - OK ↓

4. Perform self-diagnosis STEP-4. (*1)
   - NG → **Go to appropriate malfunctioning items.**
     - Check LAN system circuit. (*6)
     - Check blower motor circuit. (*7)
     - Check magnet clutch circuit. (*8)
   - OK ↓

5. Check compressor belt tension. Refer to (*12), “Checking Drive Belts”.
   - NG → Adjust or replace compressor belt.
   - OK ↓

6. Check air mix door operation. (*2)
   - NG → Adjust or replace air mix door control linkage.
   - OK ↓

7. Check cooling fan motor operation.
   - NG → Refer to (*1), “System Description”.
   - OK ↓

8. Before connectiong Recovery / Recycling Recharging equipment to vehicle, check Recovery / Recycling Recharging equipment gauges.
   No refrigerant pressure should be displayed.
   If NG, recover refrigerant from equipment lines.
   - OK ↓

9. Confirm refrigerant purity in supply tank using Recovery / Recycling Recharging equipment with refrigerant idntifier.
   - NG → Refer to Contaminated refrigerant. (*11)
   - OK ↓

10. Connect Recovery / Recycling Recharging equipment to vehicle.
    Confirm refrigerant purity in vehicle A/C system using Recovery / Recycling Recharging equipment with refrigerant indnetifier.
    - NG → Refer to Contaminated refrigerant. (*11)
    - OK ↓

11. Check for evaporator core freeze up.
    - NG (Freeze up.) → Perform performance test diagnoses. Refer to (*9).
    - (Does not freeze up.) OK ↓

12. Check refrigeration cycle pressure with manifold gauge connected. Refer to (*3).
    - NG → Perform performance test diagnoses. Refer to (*9).
    - OK ↓

13. Check ducts for air leaks.
    - NG → Replair air leaks.
    - OK ↓

14. Perform temperature setting trimmer. (*4)
    (1) Set up AUXILIARY MECHANISM mode in self-diagnosis.
    (2) Press temperature (DOWN) switch (driver side) as desired.
    - OK ↓

INSPECTION END

RJIA3005E

*1	ATC-54, "FUNCTION CONFIRMATION PROCEDURE", see No. 4 to 6.	*2	ATC-73, "Air Mix Door Motor Circuit"	*3	ATC-95, "Test Reading"
*4	ATC-59, "AUXILIARY MECHANISM: TEMPERATURE SETTING TRIMMER"	*5	ATC-54, "FUNCTION CONFIRMATION PROCEDURE", see No. 13.	*6	ATC-66, "LAN System Circuit"
*7	ATC-79, "Blower Motor Circuit"	*8	ATC-84, "Magnet Clutch Circuit"	*9	ATC-93, "PERFORMANCE TEST DIAGNOSIS"
*10	ATC-61, "Operational Check"	*11	ATC-7, "CONTAMINATED REFRIGERANT"	*12	EM-15, "Checking Drive Belts" (VQ35DE) or EM-173, "Checking Drive Belts" (VK45DE)
*13	EC-467, "SYSTEM DESCRIPTION" (VQ35DE) or EC-1213, "SYSTEM DESCRIPTION" (VK45DE)				

PERFORMANCE TEST DIAGNOSIS

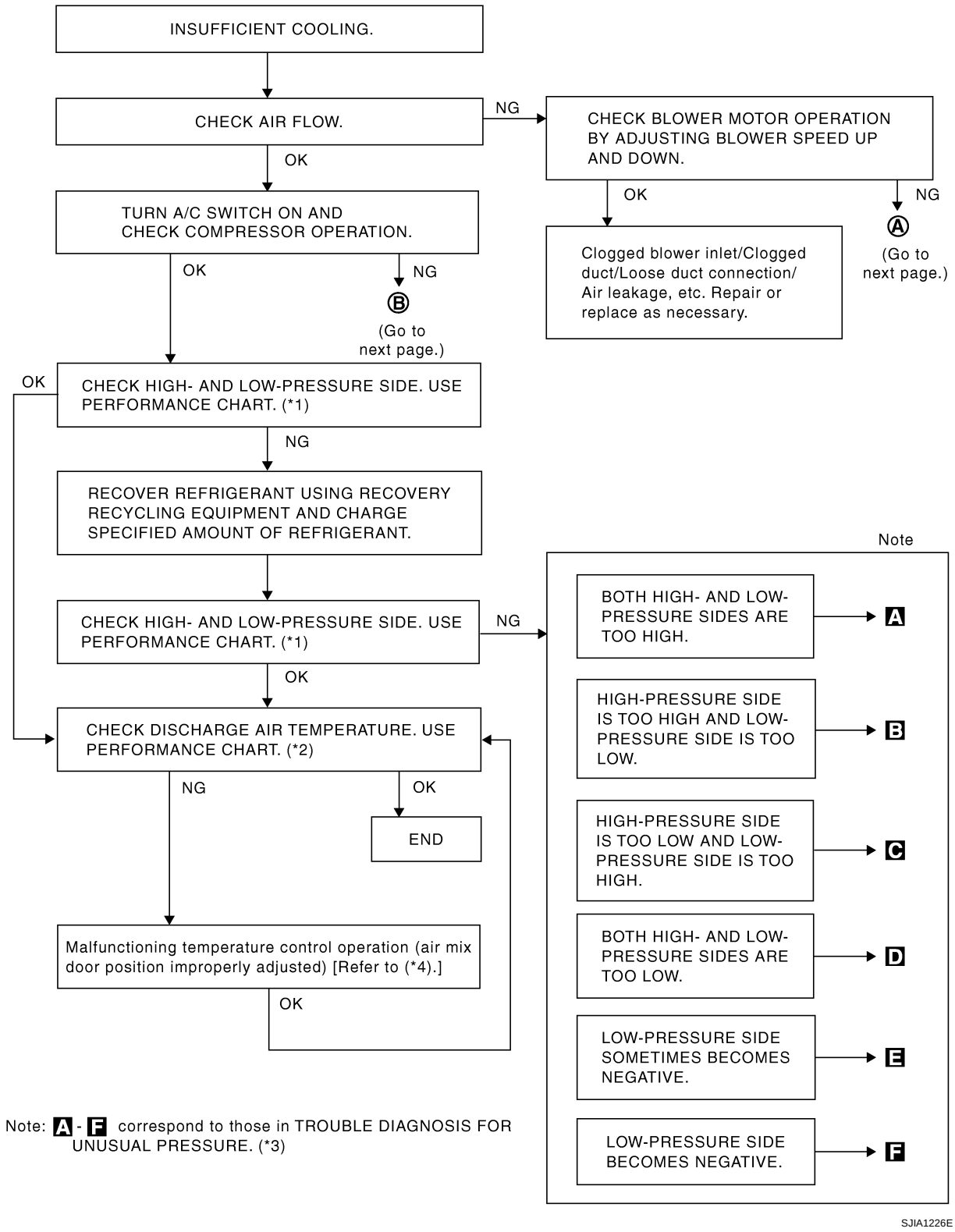

*1 ATC-95, "PERFORMANCE CHART" *2 ATC-95, "PERFORMANCE CHART" *3 ATC-96, "TROUBLE DIAGNOSIS FOR UNUSUAL PRESSURE"

*4 ATC-73, "Air Mix Door Motor Circuit"

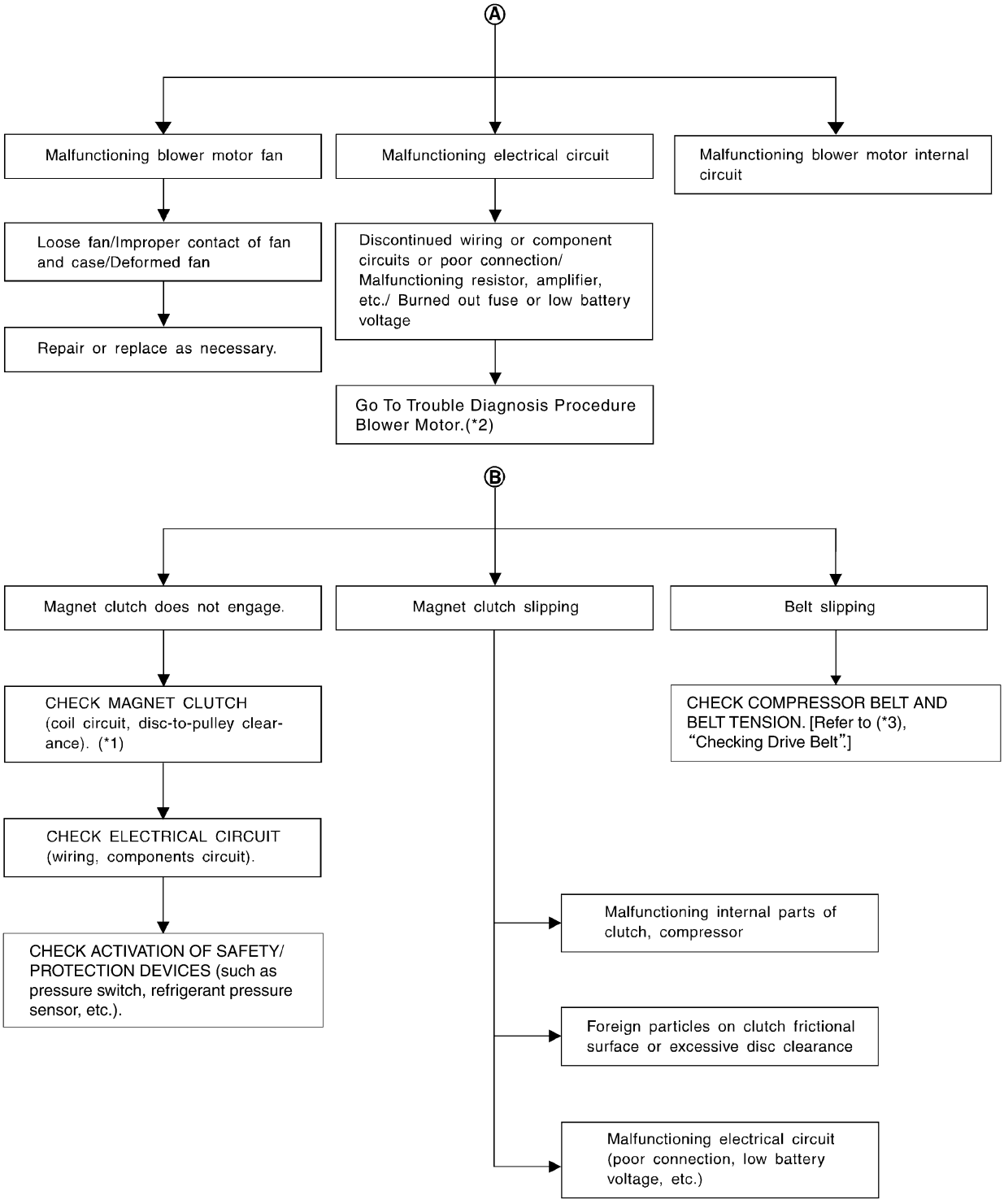

*1 ATC-144, "Removal and Installation of Compressor Clutch"

*2 ATC-79, "Blower Motor Circuit"

*3 EM-15, "Checking Drive Belts" (VQ35DE) or EM-173, "Checking Drive Belts" (VK45DE)

PERFORMANCE CHART

Test Condition

Testing must be performed as follows:

Vehicle condition	Indoors or in the shade (in a well-ventilated place)
Doors	Closed
Door windows	Open
Hood	Open
TEMP.	Max. COLD
Mode switch	(Ventilation) set
Recirculation (REC) switch	(Recirculation) set
Fan (blower) speed	Max. speed set
Engine speed	Idle speed
Operate the air conditioning system for 10 minutes before taking measurements.	

Test Reading

Recirculating-to-discharge Air Temperature Table

Inside air (Recirculating air) at blower assembly inlet		Discharge air temperature at center ventilator °C (°F)
Relative humidity %	Air temperature °C (°F)	
50 - 60	20 (68)	11.2 - 13.2 (52 - 56)
	25 (77)	12.2 - 14.8 (54 - 59)
	30 (86)	15.5 - 18.6 (60 - 65)
	35 (95)	21.0 - 24.5 (70 - 76)
	40 (104)	28.7 - 32.6 (84 - 91)
60 - 70	20 (68)	13.2 - 15.2 (56 - 59)
	25 (77)	14.8 - 17.3 (59 - 63)
	30 (86)	18.6 - 21.6 (65 - 71)
	35 (95)	24.5 - 28.0 (76 - 82)
	40 (104)	32.6 - 36.5 (91 - 98)

Ambient Air Temperature-to-operating Pressure Table

Ambient air		High-pressure (Discharge side) kPa (kg/cm^2 , psi)	Low-pressure (Suction side) kPa (kg/cm^2 , psi)
Relative humidity %	Air temperature °C (°F)		
50 - 70	20 (68)	961 - 1,167 (9.8 - 11.9, 139 - 169)	216 - 265 (2.2 - 2.7, 31 - 38)
	25 (77)	1,108 - 1,353 (11.3 - 13.8, 161 - 196)	230 - 281 (2.3 - 2.9, 33 - 41)
	30 (86)	1,275 - 1,549 (13.0 - 15.8, 185 - 225)	261 - 320 (2.7 - 3.3, 38 - 46)
	35 (95)	1,549 - 1,893 (15.8 - 19.3, 225 - 274)	297 - 364 (3.0 - 3.7, 43 - 53)
	40 (104)	1,814 - 2,216 (18.5 - 22.6, 263 - 321)	357 - 435 (3.6 - 4.4, 52 - 63)

TROUBLE DIAGNOSIS FOR UNUSUAL PRESSURE

Whenever system's high and/or low side pressure(s) is/are unusual, diagnose using a manifold gauge. The marker above the gauge scale in the following tables indicates the standard (usual) pressure range. Since the standard (usual) pressure, however, differs from vehicle to vehicle, refer to above table (Ambient air temperature-to-operating pressure table).

Both High- and Low-pressure Sides are Too High

Gauge indication	Refrigerant cycle	Probable cause	Corrective action
Both high- and low-pressure sides are too high. 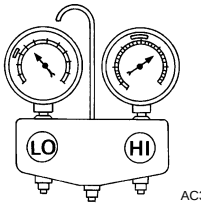 AC359A	Pressure is reduced soon after water is splashed on condenser.	Excessive refrigerant charge in refrigeration cycle.	Reduce refrigerant until specified pressure is obtained.
	Air suction by cooling fan is insufficient.	Insufficient condenser cooling performance. ↓ 1. Condenser fins are clogged. 2. Improper fan rotation of cooling fan.	● Clean condenser. ● Check and repair cooling fan as necessary.
	● Low-pressure pipe is not cold. ● When compressor is stopped high-pressure value quickly drops by approximately 196 kPa (2 kg/cm^2 , 28 psi). It then decreases gradually thereafter.	Poor heat exchange in condenser (After compressor operation stops, high-pressure decreases too slowly.) ↓ Air in refrigeration cycle.	Evacuate repeatedly and recharge system.
	Engine tends to overheat.	Engine cooling systems malfunction.	Check and repair each engine cooling system.
	● An area of the low-pressure pipe is colder than areas near the evaporator outlet. ● Plates are sometimes covered with frost.	● Excessive liquid refrigerant on low-pressure side. ● Excessive refrigerant discharge flow. ● Expansion valve is open a little compared with the specification. ↓ Improper expansion valve adjustment.	Replace expansion valve.

High-pressure Side is Too High and Low-pressure Side is Too Low

Gauge indication	Refrigerant cycle	Probable cause	Corrective action
High-pressure side is too high and low-pressure side is too low. 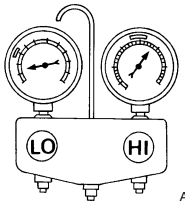 AC360A	Upper side of condenser and high-pressure side are hot, however, liquid tank is not so hot.	High-pressure tube or parts located between compressor and condenser are clogged or crushed.	● Check and repair or replace malfunctioning parts. ● Check lubricant for contamination.

High-pressure Side is Too Low and Low-pressure Side is Too High

Gauge indication	Refrigerant cycle	Probable cause	Corrective action
High-pressure side is too low and low-pressure side is too high. 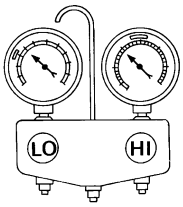	High- and low-pressure sides become equal soon after compressor operation stops.	Compressor pressure operation is improper. ↓ Damaged inside compressor packings.	Replace compressor.
	No temperature difference between high- and low-pressure sides.	Compressor pressure operation is improper. ↓ Damaged inside compressor packings.	Replace compressor.

Both High- and Low-pressure Sides are Too Low

Gauge indication	Refrigerant cycle	Probable cause	Corrective action
Both high- and low-pressure sides are too low. 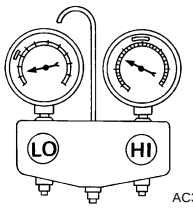	● There is a big temperature difference between liquid tank outlet and inlet. Outlet temperature is extremely low. ● Liquid tank inlet and expansion valve are frosted.	Liquid tank inside is slightly clogged.	● Replace liquid tank. ● Check lubricant for contamination.
	● Temperature of expansion valve inlet is extremely low as compared with areas near liquid tank. ● Expansion valve inlet may be frosted. ● Temperature difference occurs somewhere in high-pressure side.	High-pressure pipe located between liquid tank and expansion valve is clogged.	● Check and repair malfunctioning parts. ● Check lubricant for contamination.
	Expansion valve and liquid tank are warm or slightly cool when touched.	Low refrigerant charge. ↓ Leaking fittings or components.	Check refrigerant for leaks. Refer to ATC-158, "Checking for Refrigerant Leaks" .
	There is a big temperature difference between expansion valve inlet and outlet while the valve itself is frosted.	Expansion valve closes a little compared with the specification. ↓ 1. Improper expansion valve adjustment. 2. Malfunctioning expansion valve. 3. Outlet and inlet may be clogged.	● Remove foreign particles by using compressed air. ● Replace expansion valve. ● Check lubricant for contamination.
	An area of the low-pressure pipe is colder than areas near the evaporator outlet.	Low-pressure pipe is clogged or crushed.	● Check and repair malfunctioning parts. ● Check lubricant for contamination.
	Air flow volume is not enough or is too low.	Evaporator is frozen.	● Check intake sensor circuit. Refer to ATC-113, "Intake Sensor Circuit" . ● Replace compressor. ● Repair evaporator fins. ● Replace evaporator. ● Refer to ATC-79, "Blower Motor Circuit" .

Low-pressure Side Sometimes Becomes Negative

Gauge indication	Refrigerant cycle	Probable cause	Corrective action
Low-pressure side sometimes becomes negative. 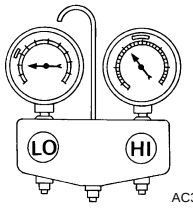	● Air conditioning system does not function and does not cyclically cool the compartment air. ● The system constantly functions for a certain period of time after compressor is stopped and restarted.	Refrigerant does not discharge cyclically. ↓ Moisture is frozen at expansion valve outlet and inlet. ↓ Water is mixed with refrigerant.	● Drain water from refrigerant or replace refrigerant. ● Replace liquid tank.

Low-pressure Side Becomes Negative

Gauge indication	Refrigerant cycle	Probable cause	Corrective action
Low-pressure side becomes negative. 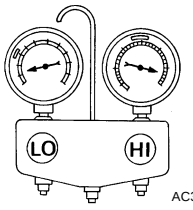	Liquid tank or front/rear side of expansion valve's pipe is frosted or dewed.	High-pressure side is closed and refrigerant does not flow. ↓ Expansion valve or liquid tank is frosted.	Leave the system at rest until no frost is present. Start it again to check whether or not the malfunction is caused by water or foreign particles. ● If water is the cause, initially cooling is okay. Then the water freezes causing a blockage. Drain water from refrigerant or replace refrigerant. ● If due to foreign particles, remove expansion valve and remove the particles with dry and compressed air (not shop air). ● If either of the above methods cannot correct the malfunction, replace expansion valve. ● Replace liquid tank. ● Check lubricant for contamination.

DIAGNOSIS PROCEDURE FOR INSUFFICIENT COOLING

SYMPTOM: Insufficient cooling

1. CHECK POWER SUPPLY FOR ECV (ELECTRONIC CONTROL VALVE)

1. Disconnect compressor (ECV) connector.
2. Turn ignition switch ON.
3. Check voltage between compressor (ECV) harness connector F6 terminal 2 (G) and ground.

2 – ground **: Battery voltage**

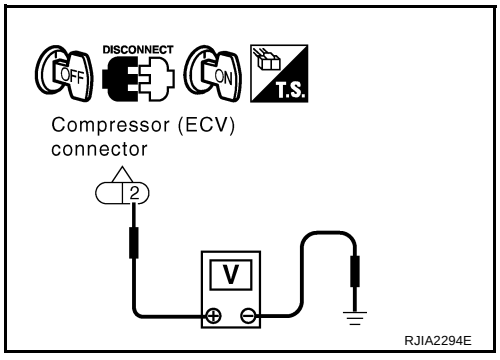

OK or NG

OK >> GO TO 2.

NG >> Check power supply circuit and 10 A fuse [No. 12, located in the fuse block (J/B)]. Refer to PG-82, "FUSE BLOCK - JUNCTION BOX (J/B)" .

- If fuse is OK, check harness for open circuit. Repair or replace if necessary.
- If fuse is NG, replace fuse and check harness for short circuit. Repair or replace if necessary.

2. CHECK ECV CONTROL SIGNAL

1. Turn ignition switch OFF.
2. Reconnect compressor (ECV) connector.
3. Perform self-diagnosis. Refer to ATC-53, "Self-diagnosis Function" .
4. Set in self-diagnosis STEP-4 (Code No. 45). Refer to ATC-54, "FUNCTION CONFIRMATION PROCEDURE" .
5. Confirm ECV control signal between unified meter and A/C amp. harness connector M57 terminal 45 (PU/W) and ground using an oscilloscope.

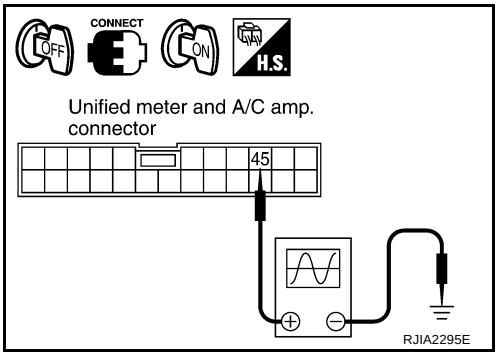

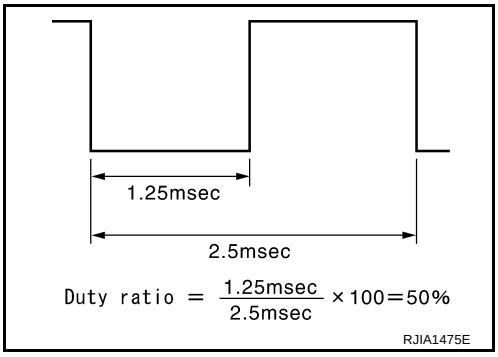

OK or NG

OK >> Replace compressor.
NG >> GO TO 3.

3. CHECK CIRCUIT CONTINUITY BETWEEN ECV AND UNIFIED METER AND A/C AMP.

1. Turn ignition switch OFF.
2. Disconnect compressor (ECV) and unified meter and A/C amp. connector.
3. Check continuity between compressor (ECV) harness connector F6 terminal 3 (PU) and unified meter and A/C amp. harness connector M57 terminal 45 (PU/W).

3 – 45 : Continuity should exist.

OK or NG

OK >> GO TO 4.
NG >> Repair harness or connector.

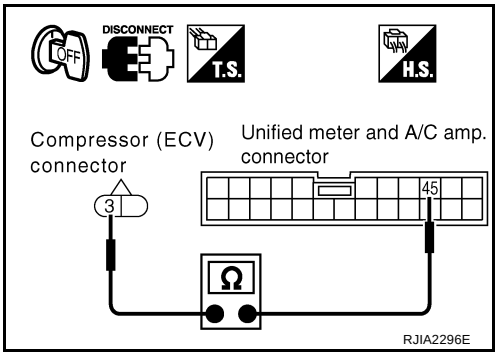

4. CHECK ECV

Check continuity between compressor (ECV) connector F6 terminals 2 and 3.

2 – 3 : Continuity should exist.

OK or NG

OK >> Replace unified meter and A/C amp.
NG >> Replace compressor.

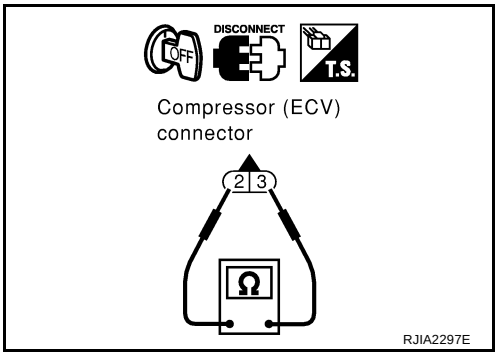

Insufficient Heating

AJS00150

SYMPTOM: Insufficient heating

INSPECTION FLOW

1. Confirm symptom by performing the following operational check.

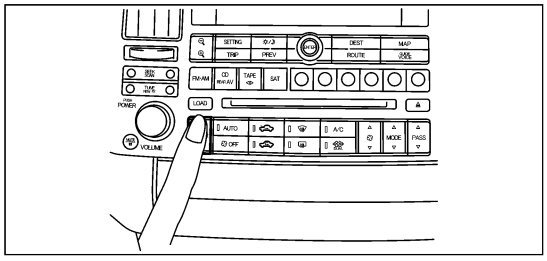

OPERATIONAL CHECK - Temperature increase

a. Press temperature (UP) switch (driver side) until 32°C (90°F) is displayed.

b. Check for hot air at discharge air outlets.

If OK (symptom cannot be duplicated), perform complete operational check (*1).
If NG (symptom is confirmed), continue with STEP-2 following.

2. Check for any service bulletins.

3. Perform self-diagnosis STEP-2. (*3)
   - NG → Go to appropriate malfunctioning sensor circuit. (*4)
   - OK ↓

4. Perform self-diagnosis STEP-4. (*3)
   - NG → **Go to appropriate malfunctioning items.**
     - Check LAN system circuit. (*5)
     - Check blower motor circuit. (*6)
   - OK ↓

5. Check the following:
   - Engine coolant level [Refer to (*8), "Changing Engine Coolant".]
   - Hoses for leaks or kinks.
   - Radiator cap [Refer to (*9), "Checking Radiator Cap".]
   - Air in cooling system.
   - NG → Repair/replace as necessary.
   - OK ↓

6. Check air mix door operation.
   - NG → Go to Air Mix Door Motor Circuit. (*2)
   - OK ↓

7. Check ducts for air leaks.
   - NG → Repair leaks.
   - OK ↓

8. Check the heater inlet and outlet hose temperatures by touching.
   - Hot inlet, Warm outlet → Check water temperature sensor or thermostat (*7)
     - NG → Check heater hoses for proper installation.
       - NG → Repair or replace as necessary. Retest.
       - OK ↓
     - OK → System OK
   - Both hoses warm → Check heater hoses for proper installation.
     - NG → Repair or replace as necessary. Retest.
     - OK ↓
   - Back flush heater core, drain and refill coolant. [Refer to (*8), "Changing Engine Coolant".] Retest.
     - Hot inlet, Warm outlet → System OK
     - Both hoses warm → Replace heater core. Refill engine coolant. [Refer to (*8), "Changing Engine Coolant".] Retest.
       - Hot inlet, Warm outlet → System OK

RJIA2013E

*1 ATC-61, "Operational Check"	*2 ATC-73, "Air Mix Door Motor Circuit"	*3 ATC-54, "FUNCTION CONFIRMATION PROCEDURE", see No. 4 to 6.
*4 ATC-54, "FUNCTION CONFIRMATION PROCEDURE", see No. 13.	*5 ATC-66, "LAN System Circuit"	*6 ATC-79, "Blower Motor Circuit"
*7 EC-208, "DTC P0117, P0118 ECT SENSOR" (VQ35DE) or EC-914, "DTC P0117, P0118 ECT SENSOR" (VK45DE)	*8 CO-11, "Changing Engine Coolant" (VQ35DE) or CO-37, "Changing Engine Coolant" (VK45DE)	*9 CO-15, "Checking Radiator Cap" (VQ35DE) or CO-43, "Checking Radiator Cap" (VK45DE)

Noise

AJS00151

SYMPTOM: Noise

INSPECTION FLOW

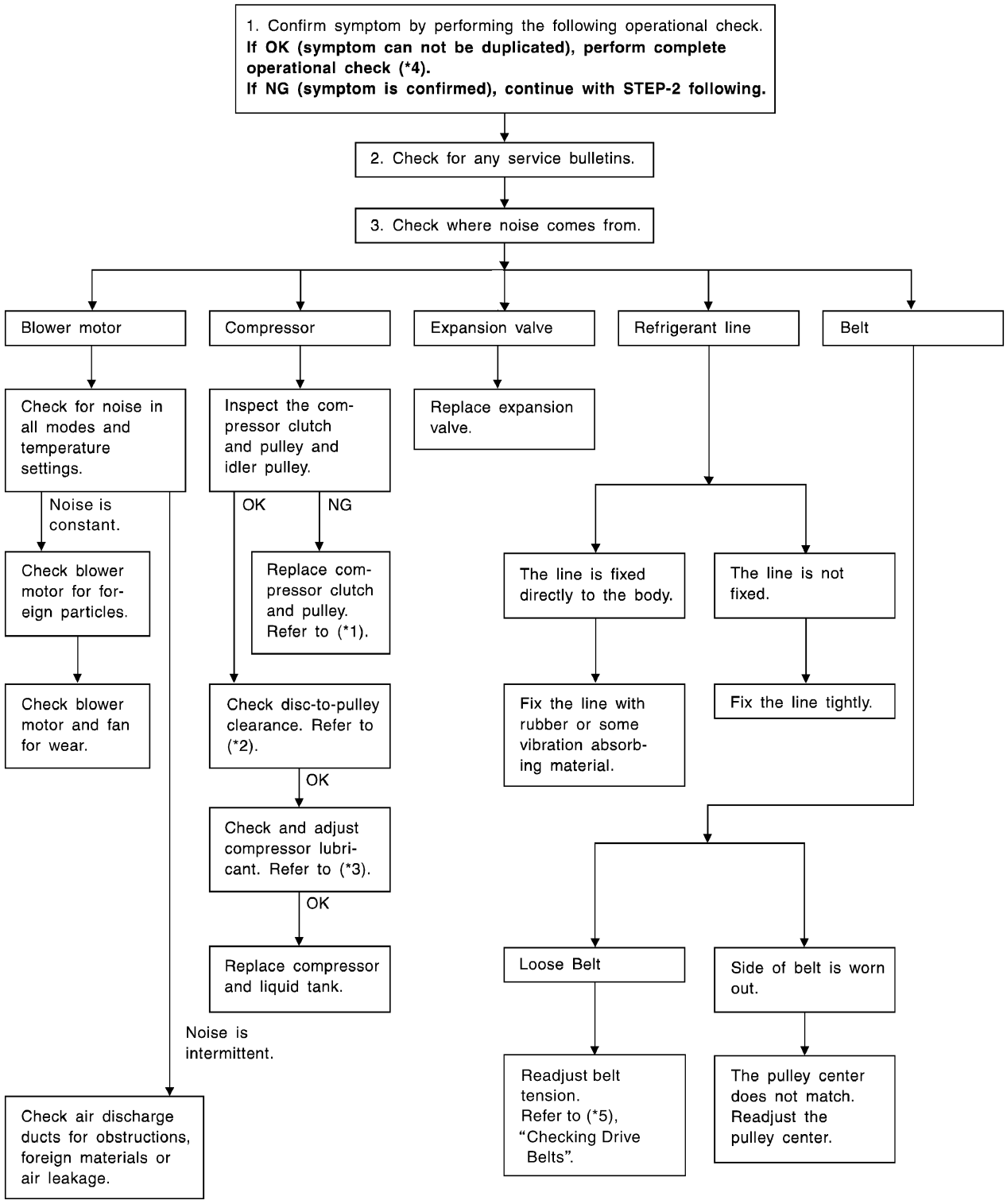

RJIA3108E

*1 Compressor Clutch, ATC-144, "REMOVAL"
*2 Compressor Clutch, ATC-146, "INSTALLATION"
*3 ATC-27, "Maintenance of Lubricant Quantity in Compressor"
*4 ATC-61, "Operational Check"
*5 EM-15, "Checking Drive Belts" (VQ35DE) or EM-173, "Checking Drive Belts" (VK45DE)

Self-diagnosis

AJS00152

SYMPTOM: Self-diagnosis cannot be performed.

INSPECTION FLOW

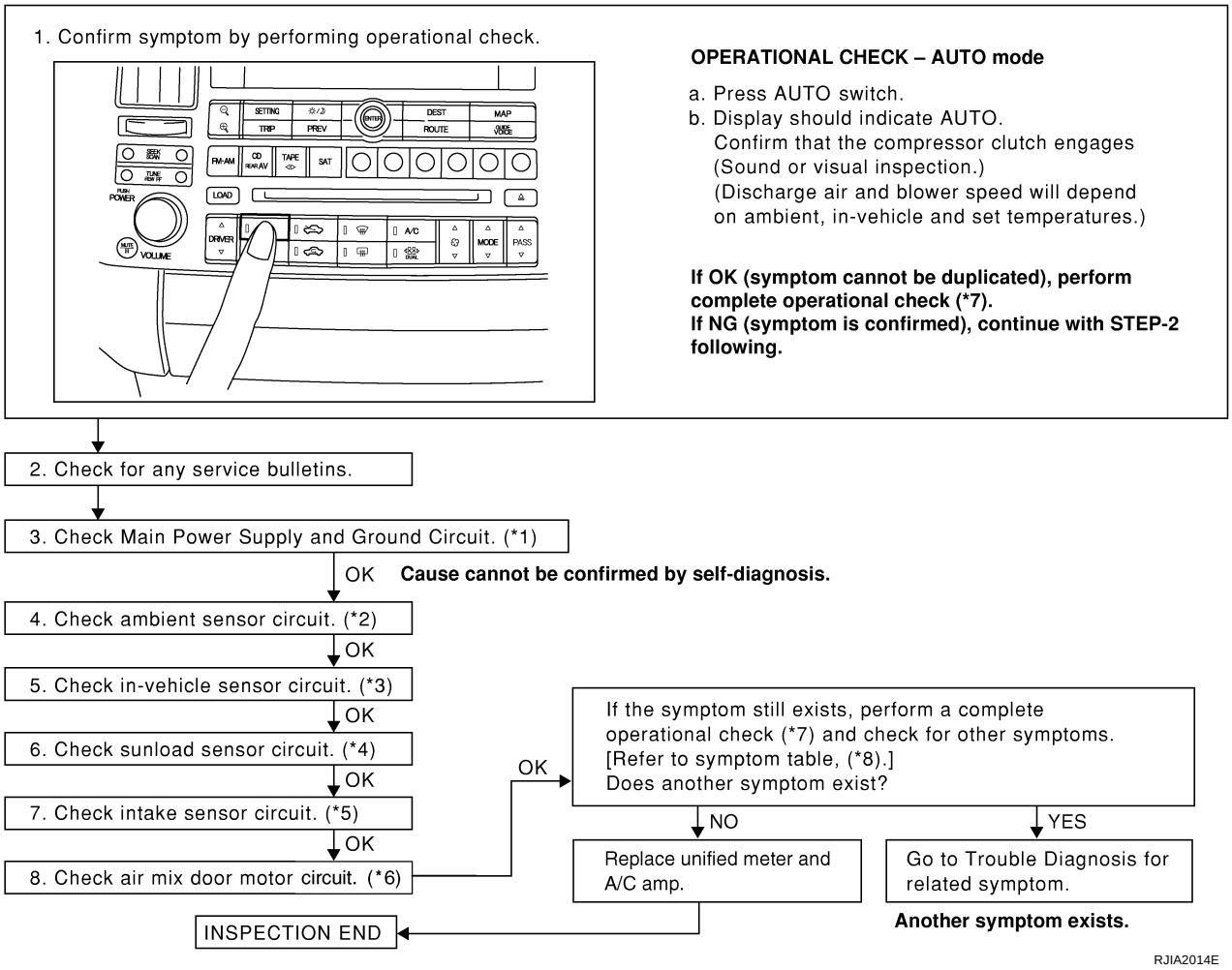

*1 ATC-63, "Power Supply and Ground Circuit for Auto Amp."
*2 ATC-104, "Ambient Sensor Circuit"
*3 ATC-107, "In-vehicle Sensor Circuit"
*4 ATC-110, "Sunload Sensor Circuit"
*5 ATC-113, "Intake Sensor Circuit"
*6 ATC-73, "Air Mix Door Motor Circuit"
*7 ATC-61, "Operational Check"
*8 ATC-42, "SYMPTOM TABLE"

Memory Function

AJS00153

SYMPTOM: Memory function does not operate.

INSPECTION FLOW

1. Confirm symptom by performing the following operational check.

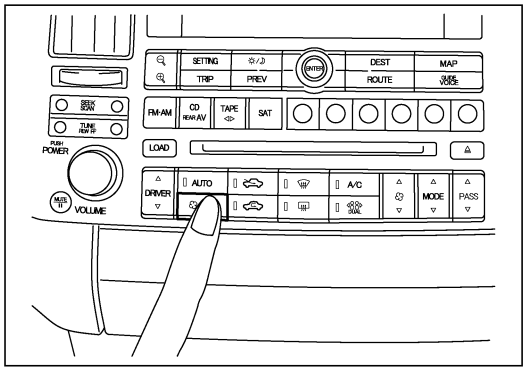

OPERATIONAL CHECK – Memory function

a. Set the temperature 32°C (90°F).
b. Press OFF switch.
c. Turn the ignition off.
d. Turn the ignition on.
e. Press the AUTO switch.
f. Confirm that the set temperature remains at previous temperature.
g. Press OFF switch.

If OK (symptom cannot be duplicated), perform complete operational check (*2).
If NG (symptom is confirmed), continue with STEP-2 following.

↓

2. Check for any service bulletins.

↓

3. Check Main Power Supply and Ground Circuit. (*1)

↓ OK

4. Replace Unfied meter and A/C amp.

↓

5. FINAL CHECK
Go to self-diagnosis function confirmation procedure (*3) and perform self-diagnosis STEP-2.
Confirm that code No. 20 is displayed.

RJIA2015E

*1 ATC-63, "Power Supply and Ground Circuit for Auto Amp."
*2 ATC-61, "Operational Check"
*3 ATC-54, "FUNCTION CONFIRMATION PROCEDURE"

Ambient Sensor Circuit

AJS00154

COMPONENT DESCRIPTION

Ambient Sensor

The ambient sensor is attached on the hood lock stay. It detects ambient temperature and converts it into a resistance value which is then input into the unified meter and A/C amp.

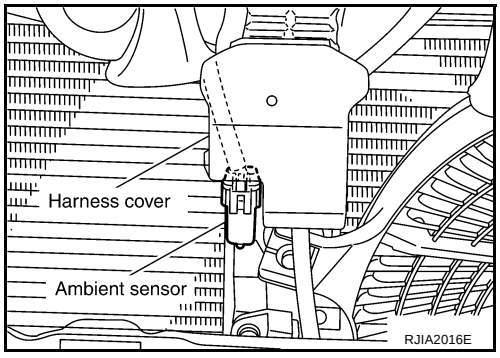

AMBIENT TEMPERATURE INPUT PROCESS

The unified meter and A/C amp. includes a processing circuit for the ambient sensor input. However, when the temperature detected by the ambient sensor increases quickly, the processing circuit retards the unified meter and A/C amp. function. It only allows the unified meter and A/C amp. to recognize an ambient temperature increase of 0.33°C (0.6°F) per 100 seconds.

As an example, consider stopping for a few minutes after high speed driving. Although the actual ambient temperature has not changed, the temperature detected by the ambient sensor will increase. This is because the heat from the engine compartment can radiate to the front grille area, location of the ambient sensor.

DIAGNOSIS PROCEDURE FOR AMBIENT SENSOR

SYMPTOM: Ambient sensor circuit is open or shorted. (21 or –21 is indicated on unified meter and A/C amp. as a result of performing self-diagnosis STEP-2.)

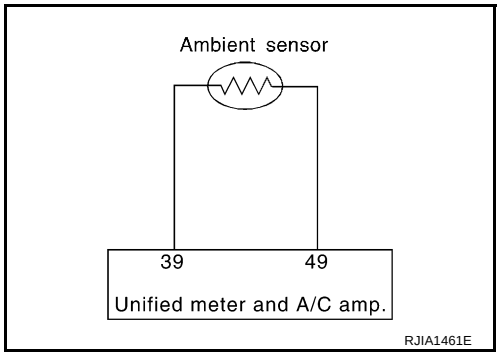

1. CHECK VOLTAGE BETWEEN AMBIENT SENSOR AND GROUND

1. Disconnect ambient sensor connector.
2. Turn ignition switch ON.
3. Check voltage between ambient sensor harness connector E34 terminal 1 (Y) and ground.

1 – Ground : Approx. 5 V

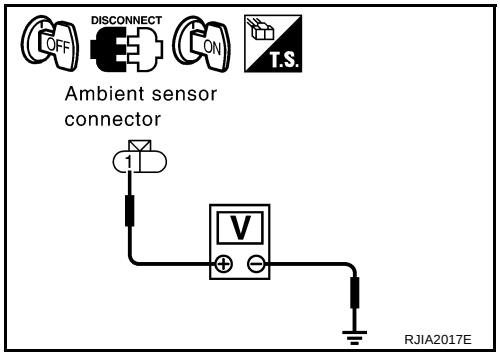

OK or NG

OK >> GO TO 2.
NG >> GO TO 4.

2. CHECK CIRCUIT CONTINUITY BETWEEN AMBIENT SENSOR AND UNIFIED METER AND A/C AMP.

1. Turn ignition switch OFF.
2. Disconnect unified meter and A/C amp. connector.
3. Check continuity between ambient sensor harness connector E34 terminal 2 (W) and unified meter and A/C amp. harness connector M57 terminal 49 (W/G).

2 – 49 : Continuity should exist.

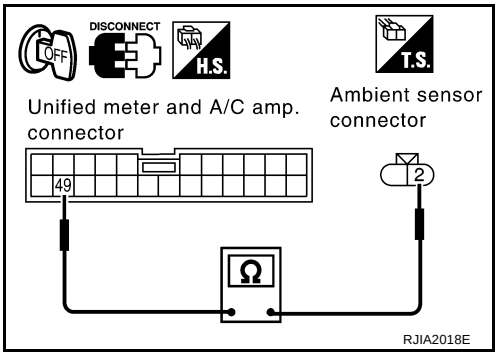

OK or NG

OK >> GO TO 3.
NG >> Repair harness or connector.

3. CHECK AMBIENT SENSOR

Refer to ATC-106, "Ambient Sensor" .

OK or NG

OK >> 1. Replace unified meter and A/C amp.
2. Go to self-diagnosis ATC-54, "FUNCTION CONFIRMATION PROCEDURE" and perform self-diagnosis STEP-2. Confirm that code No. 20 is displayed.

NG >> 1. Replace ambient sensor.
2. Go to self-diagnosis ATC-54, "FUNCTION CONFIRMATION PROCEDURE" and perform self-diagnosis STEP-2. Confirm that code No. 20 is displayed.

4. CHECK CIRCUIT CONTINUITY BETWEEN AMBIENT SENSOR AND UNIFIED METER AND A/C AMP.

1. Turn ignition switch OFF.
2. Disconnect unified meter and A/C amp. connector.
3. Check continuity between ambient sensor harness connector E34 terminal 1 (Y) and unified meter and A/C amp. harness connector M57 terminal 39 (Y).

1 – 39 : Continuity should exist.

4. Check continuity between ambient sensor harness connector E34 terminal 1 (Y) and ground.

1 – Ground : Continuity should not exist.

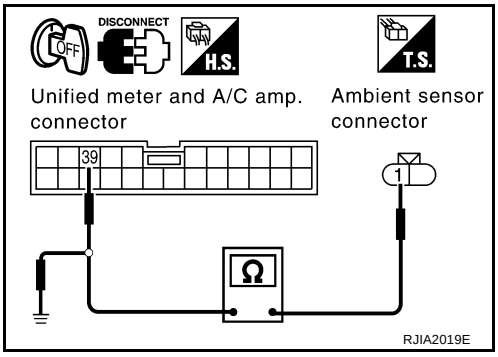

OK or NG

OK >> 1. Replace unified meter and A/C amp.
2. Go to self-diagnosis ATC-54, "FUNCTION CONFIRMATION PROCEDURE" and perform self-diagnosis STEP-2. Confirm that code No. 20 is displayed.

NG >> Repair harness or connector.

COMPONENT INSPECTION

Ambient Sensor

After disconnecting ambient sensor connector E34, measure resistance between terminals 1 and 2 at sensor side, using the table below.

Temperature °C (°F)	Resistance kΩ
–15 (5)	12.73
–10 (14)	9.92
–5 (23)	7.80
0 (32)	6.19
5 (41)	4.95
10 (50)	3.99
15 (59)	3.24
20 (68)	2.65
25 (77)	2.19
30 (86)	1.81
35 (95)	1.51
40 (104)	1.27
45 (113)	1.07

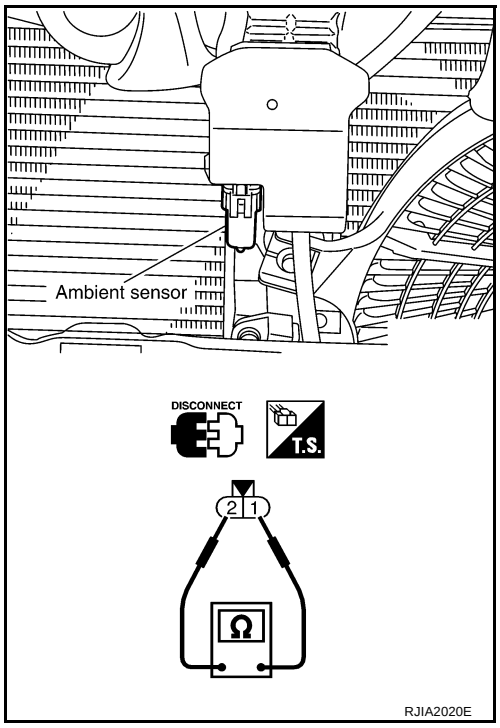

If NG, replace ambient sensor.

In-vehicle Sensor Circuit

AJS00155

COMPONENT DESCRIPTION

In-vehicle Sensor

The in-vehicle sensor is located on instrument driver lower panel. It converts variations in temperature of compartment air drawn from the aspirator into a resistance value. It is then input into the unified meter and A/C amp.

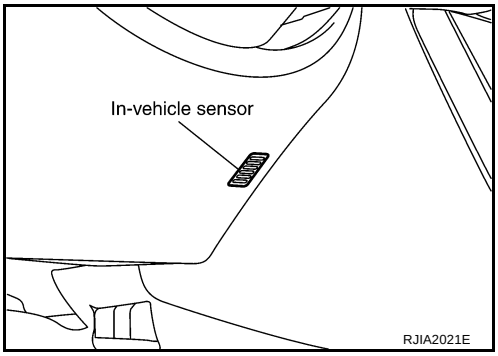

Aspirator

The aspirator is located on driver's side of heater & cooling unit. It produces vacuum pressure due to air discharged from the heater & cooling unit, continuously taking compartment air in the aspirator.

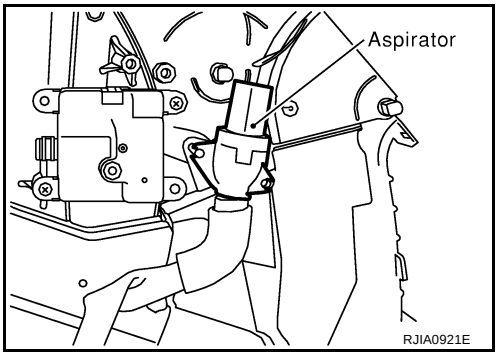

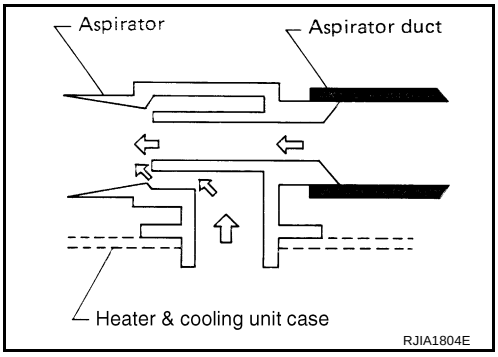

DIAGNOSIS PROCEDURE FOR IN-VEHICLE SENSOR

SYMPTOM: In-vehicle sensor circuit is open or shorted. (22 or –22 is indicated on unified meter and A/C amp. as a result of performing self-diagnosis STEP-2.)

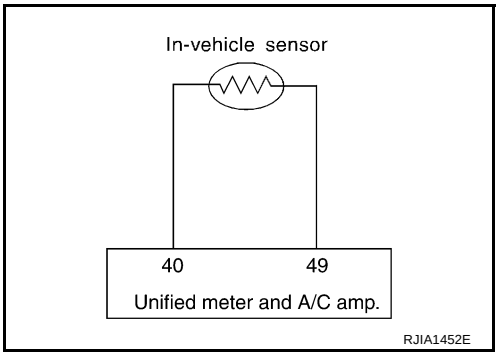

1. CHECK VOLTAGE BETWEEN IN-VEHICLE SENSOR AND GROUND

1. Disconnect in-vehicle sensor connector.
2. Turn ignition switch ON.
3. Check voltage between in-vehicle sensor harness connector M46 terminal 1 (BR/W) and ground.

1 – Ground : Approx. 5 V

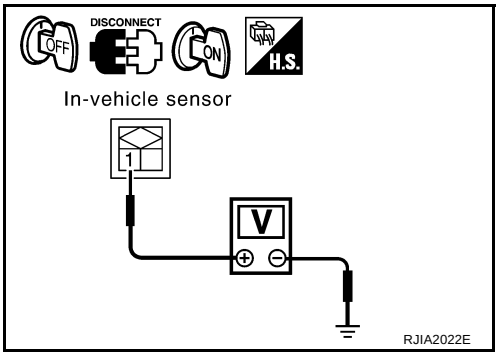

OK or NG

OK >> GO TO 2.
NG >> GO TO 4.

2. CHECK CIRCUIT CONTINUITY BETWEEN IN-VEHICLE SENSOR AND UNIFIED METER AND A/C AMP.

1. Turn ignition switch OFF.
2. Disconnect unified meter and A/C amp. connector.
3. Check continuity between in-vehicle sensor harness connector M46 terminal 2 (W/G) and unified meter and A/C amp. harness connector M57 terminal 49 (W/G).

2 – 49 : Continuity should exist.

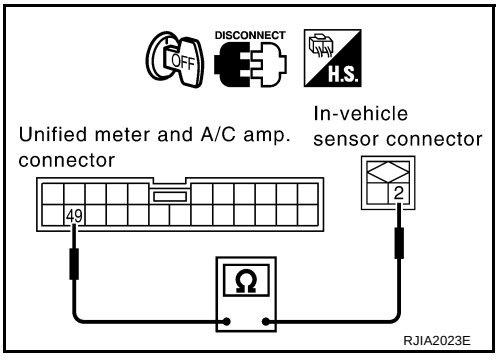

OK or NG

OK >> GO TO 3.
NG >> Repair harness or connector.

3. CHECK IN-VEHICLE SENSOR

Refer to ATC-109, "In-vehicle Sensor" .

OK or NG

OK >> 1. Replace unified meter and A/C amp.
2. Go to self-diagnosis ATC-54, "FUNCTION CONFIRMATION PROCEDURE" and perform self-diagnosis STEP-2. Confirm that code No. 20 is displayed.

NG >> 1. Replace in-vehicle sensor.
2. Go to self-diagnosis ATC-54, "FUNCTION CONFIRMATION PROCEDURE" and perform self-diagnosis STEP-2. Confirm that code No. 20 is displayed.

4. CHECK CIRCUIT CONTINUITY BETWEEN IN-VEHICLE SENSOR AND UNIFIED METER AND A/C AMP.

1. Turn ignition switch OFF.
2. Disconnect unified meter and A/C amp. connector.
3. Check continuity between in-vehicle sensor harness connector M46 terminal 1 (BR/W) and unified meter and A/C amp. harness connector M57 terminal 40 (BR/W).

   1 – 40 : Continuity should exist.

4. Check continuity between in-vehicle sensor harness connector M46 terminal 1 (BR/W) and ground.

   1 – Ground : Continuity should not exist.

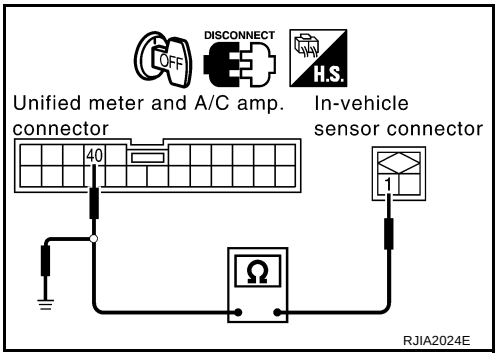

OK or NG

OK >> 1. Replace unified meter and A/C amp.
2. Go to self-diagnosis ATC-54, "FUNCTION CONFIRMATION PROCEDURE" and perform self-diagnosis STEP-2. Confirm that code No. 20 is displayed.

NG >> Repair harness or connector.

COMPONENT INSPECTION

In-vehicle Sensor

After disconnecting in-vehicle sensor connector M46, measure resistance between terminals 1 and 2 at sensor side, using the table below.

Temperature °C (°F)	Resistance kΩ
–15 (5)	12.73
–10 (14)	9.92
–5 (23)	7.80
0 (32)	6.19
5 (41)	4.95
10 (50)	3.99
15 (59)	3.24
20 (68)	2.65
25 (77)	2.19
30 (86)	1.81
35 (95)	1.51
40 (104)	1.27
45 (113)	1.07

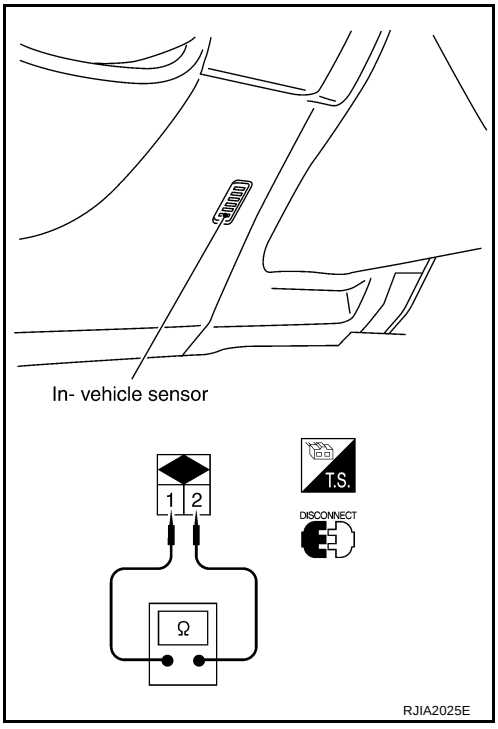

If NG, replace in-vehicle sensor.

Sunload Sensor Circuit

AJS00156

COMPONENT DESCRIPTION

Sunload Sensor

The sunload sensor is located on the passenger's side front defroster grille. It detects sunload entering through windshield by means of a photo diode. The sensor converts the sunload into a current value which is then input into the unified meter and A/C amp.

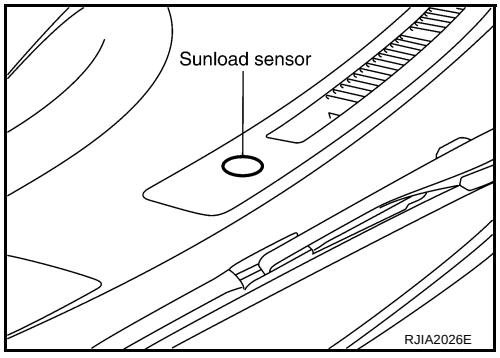

SUNLOAD INPUT PROCESS

The unified meter and A/C amp. also includes a processing circuit which averages the variations in detected sunload over a period of time. This prevents drastic swings in the ATC system operation due to small or quick variations in detected sunload.

For example, consider driving along a road bordered by an occasional group of large trees. The sunload detected by the sunload sensor will vary whenever the trees obstruct the sunlight. The processing circuit averages the detected sunload over a period of time, so that the (insignificant) effect of the trees momentarily obstructing the sunlight does not cause any change in the ATC system operation. On the other hand, shortly after entering a long tunnel, the system will recognize the change in sunload, and the system will react accordingly.

DIAGNOSIS PROCEDURE FOR SUNLOAD SENSOR

SYMPTOM: Sunload sensor circuit is open or shorted. (25 or –25 is indicated on unified meter and A/C amp. as a result of performing self-diagnosis STEP-2.)

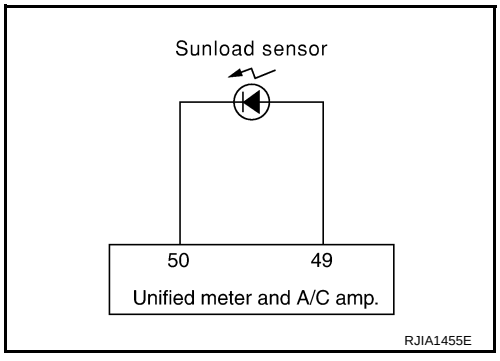

1. CHECK VOLTAGE BETWEEN SUNLOAD SENSOR AND GROUND

1. Disconnect sunload sensor connector.
2. Turn ignition switch ON.
3. Check voltage between sunload sensor harness connector M87 terminal 1 (LG) and ground.

1 – Ground : Approx. 5 V

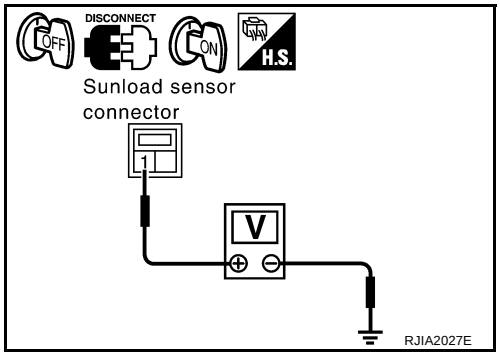

OK or NG

OK >> GO TO 2.
NG >> GO TO 4.

2. CHECK CIRCUIT CONTINUITY BETWEEN SUNLOAD SENSOR AND UNIFIED METER AND A/C AMP.

1. Turn ignition switch OFF.
2. Disconnect unified meter and A/C amp. connector.
3. Check continuity between sunload sensor harness connector M87 terminal 2 (W/G) and unified meter and A/C amp. harness connector M57 terminal 49 (W/G).

2 – 49 : Continuity should exist.

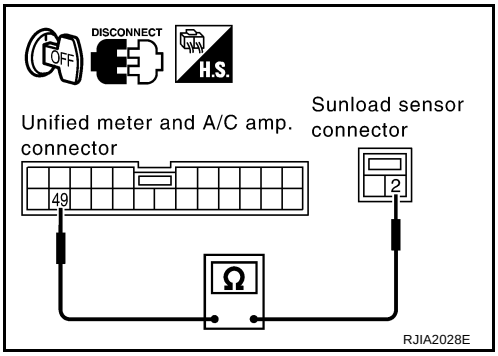

OK or NG

OK >> GO TO 3.
NG >> Repair harness or connector.

3. CHECK SUNLOAD SENSOR

1. Reconnect sunload sensor connector and unified meter and A/C amp. connector.
2. Refer to ATC-112, "Sunload Sensor" .

OK or NG

OK >> 1. Replace unified meter and A/C amp.
2. Go to self-diagnosis ATC-54, "FUNCTION CONFIRMATION PROCEDURE" and perform self-diagnosis STEP-2. Confirm that code No. 20 is displayed.

NG >> 1. Replace sunload sensor.
2. Go to self-diagnosis ATC-54, "FUNCTION CONFIRMATION PROCEDURE" and perform self-diagnosis STEP-2. Confirm that code No. 20 is displayed.

4. CHECK CIRCUIT CONTINUITY BETWEEN SUNLOAD SENSOR AND UNIFIED METER AND A/C AMP.

1. Turn ignition switch OFF.
2. Disconnect unified meter and A/C amp. connector.
3. Check continuity between sunload sensor harness connector M87 terminal 1 (LG) and unified meter and A/C amp. harness connector M57 terminal 50 (LG).

1 – 50 : Continuity should exist.

4. Check continuity between sunload sensor harness connector M87 terminal 1 (LG) and ground.

1 – Ground : Continuity should not exist.

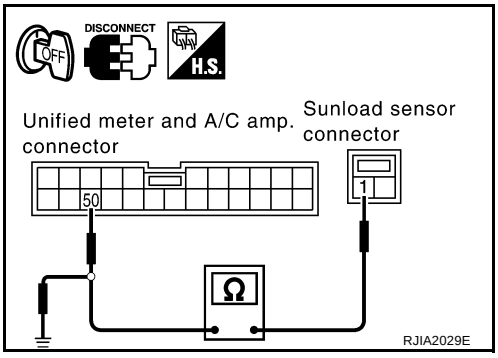

OK or NG

OK >> 1. Replace unified meter and A/C amp.
2. Go to self-diagnosis ATC-54, "FUNCTION CONFIRMATION PROCEDURE" and perform self-diagnosis STEP-2. Confirm that code No. 20 is displayed.

NG >> Repair harness or connector.

COMPONENT INSPECTION

Sunload Sensor

Measure voltage between unified meter and A/C amp. harness connector M57 terminal 50 (LG) and ground.

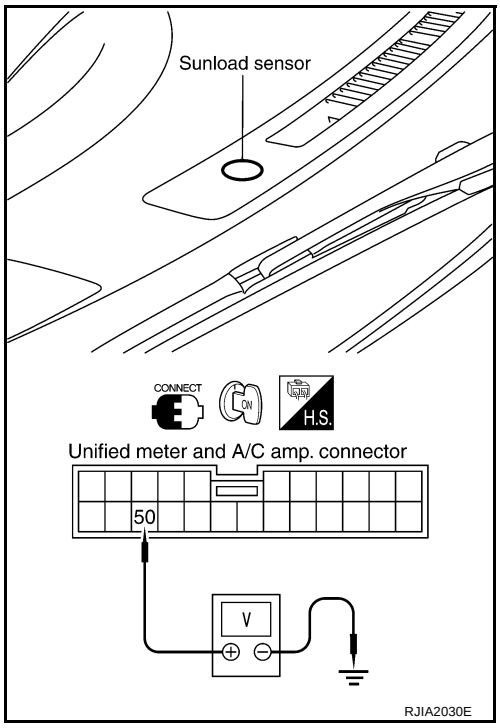

- When checking sunload sensor, select a place where sun shines directly on it.

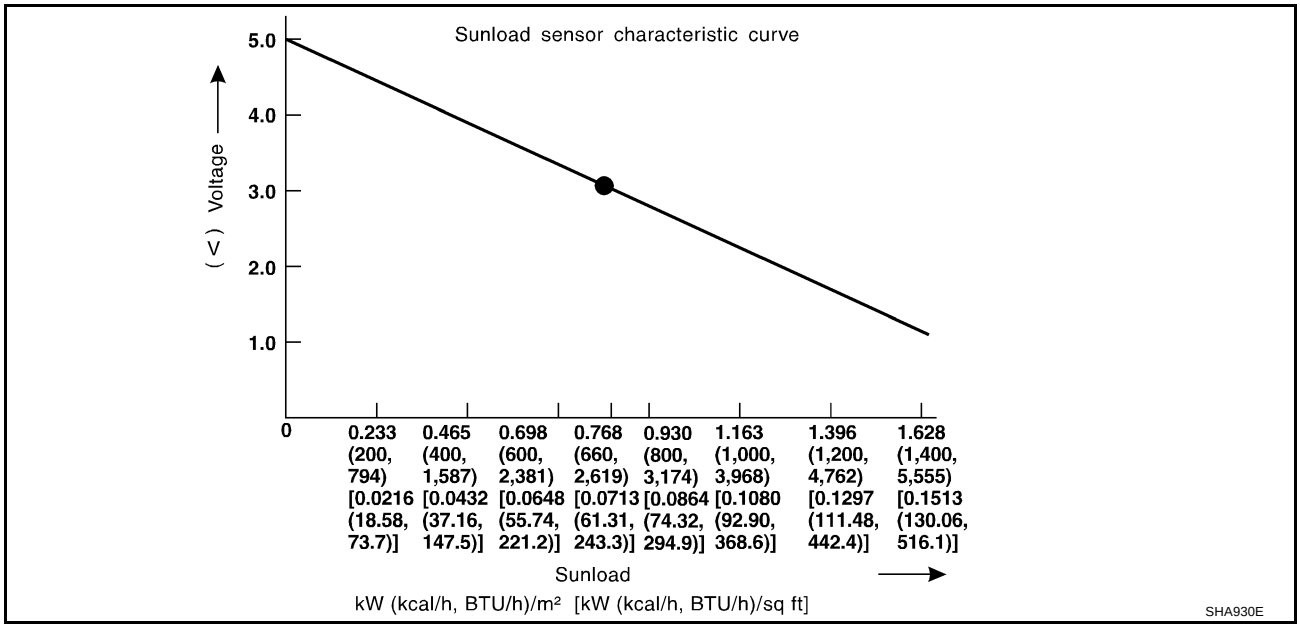

If NG, replace sunload sensor.

Intake Sensor Circuit

AJS00157

COMPONENT DESCRIPTION

Intake Sensor

The intake sensor is located on the heater & cooling unit assembly. It converts temperature of air after it passes through the evaporator into a resistance value which is then input to the unified meter and A/C amp.

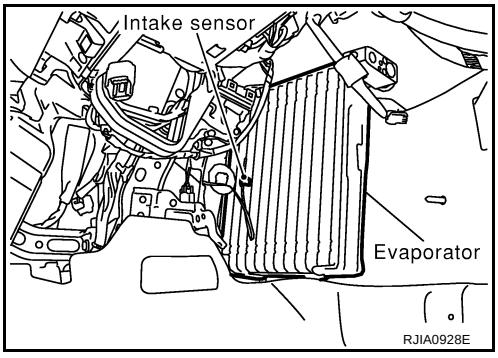

DIAGNOSIS PROCEDURE FOR INTAKE SENSOR

SYMPTOM: Intake sensor circuit is open or shorted. (24 or –24 is indicated on unified meter and A/C amp. as a result of performing self-diagnosis STEP-2.)

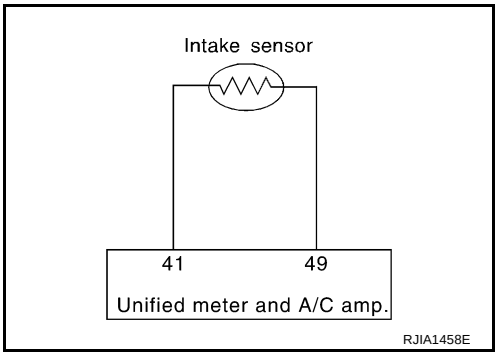

1. CHECK VOLTAGE BETWEEN INTAKE SENSOR AND GROUND

1. Disconnect intake sensor connector.
2. Turn ignition switch ON.
3. Check voltage between intake sensor harness connector M254 terminal 2 (R) and ground.

2 – Ground : Approx. 5 V

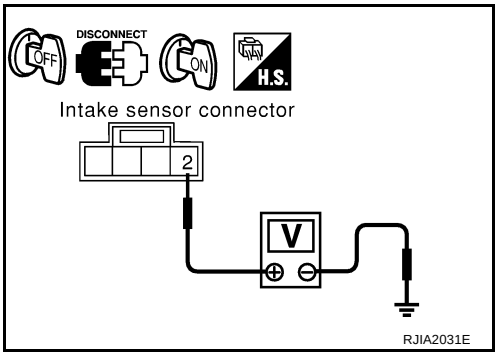

OK or NG

OK >> GO TO 2.
NG >> GO TO 4.

2. CHECK CIRCUIT CONTINUITY BETWEEN INTAKE SENSOR AND UNIFIED METER AND A/C AMP.

1. Turn ignition switch OFF.
2. Disconnect unified meter and A/C amp. connector.
3. Check continuity between intake sensor harness connector M254 terminal 1 (W) and unified meter and A/C amp. harness connector M57 terminal 49 (W/G).

1 – 49 : Continuity should exist.

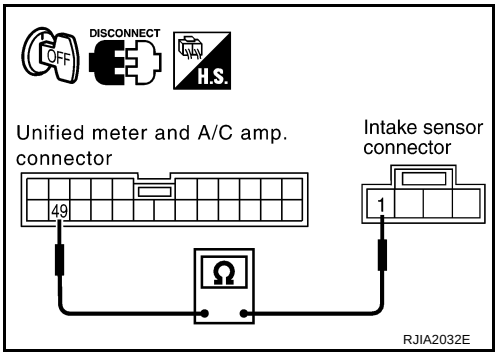

OK or NG

OK >> GO TO 3.
NG >> Repair harness or connector.

3. CHECK INTAKE SENSOR

Refer to ATC-114, "Intake Sensor" .

OK or NG

OK >> 1. Replace unified meter and A/C amp.
2. Go to self-diagnosis ATC-54, "FUNCTION CONFIRMATION PROCEDURE" and perform self-diagnosis STEP-2. Confirm that code No. 20 is displayed.

NG >> 1. Replace intake sensor.
2. Go to self-diagnosis ATC-54, "FUNCTION CONFIRMATION PROCEDURE" and perform self-diagnosis STEP-2. Confirm that code No. 20 is displayed.

4. CHECK CIRCUIT CONTINUITY BETWEEN INTAKE SENSOR AND UNIFIED METER AND A/C AMP.

1. Turn ignition switch OFF.
2. Disconnect unified meter and A/C amp. connector.
3. Check continuity between intake sensor harness connector M254 terminal 2 (R) and unified meter and A/C amp. harness connector M57 terminal 41 (P).

2 – 41 : Continuity should exist.

4. Check continuity between intake sensor harness connector M254 terminal 2 (R) and ground.

2 – Ground : Continuity should not exist.

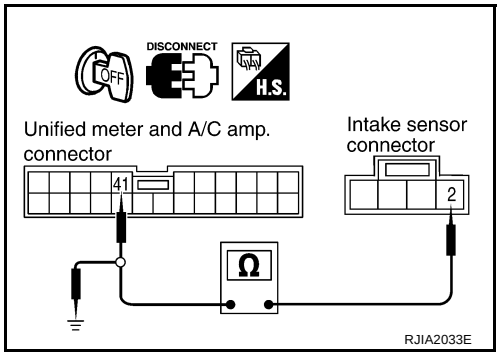

OK or NG

OK >> 1. Replace unified meter and A/C amp.
2. Go to self-diagnosis ATC-54, "FUNCTION CONFIRMATION PROCEDURE" and perform self-diagnosis STEP-2. Confirm that code No. 20 is displayed.

NG >> Repair harness or connector.

COMPONENT INSPECTION

Intake Sensor

After disconnecting intake sensor connector M254, measure resistance between terminals 1 and 2 at sensor side, using the table below.

Temperature °C (°F)	Resistance kΩ
–15 (5)	12.34
–10 (14)	9.62
–5 (23)	7.56
0 (32)	6.00
5 (41)	4.80
10 (50)	3.87
15 (59)	3.15
20 (68)	2.57
25 (77)	2.12
30 (86)	1.76
35 (95)	1.47
40 (104)	1.23
45 (113)	1.04

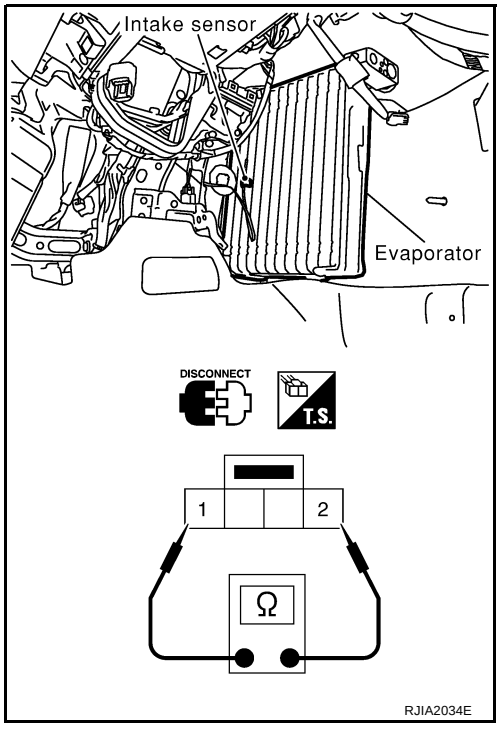

If NG, replace intake sensor.

CONTROLLER

PFP:27500

Removal and Installation of A/C and AV Switch

AJS001BN

REMOVAL

Refer to AV-48, "Removal and Installation for A/C and AV Switch" .

INSTALLATION

Installation is basically the reverse order of removal.

AUTO AMP

PFP:27760

Removal and Installation of Unified Meter and A/C Amp.

AJS00159

REMOVAL

1. Remove audio unit. Refer to AV-47, "Removal and Installation of Audio Unit" .
2. Remove mounting screws, and then remove unified meter and A/C amp.

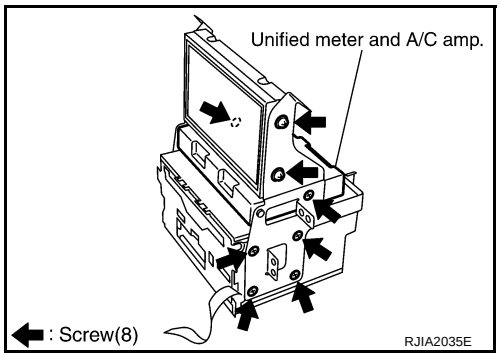

INSTALLATION

Installation is basically the reverse order of removal.

AMBIENT SENSOR

PFP:27722

Removal and Installation

AJS0015A

REMOVAL

1. Remove front grille. Refer to EI-22, "FRONT GRILLE" .
2. Disconnect ambient sensor connector, and then remove ambient sensor.

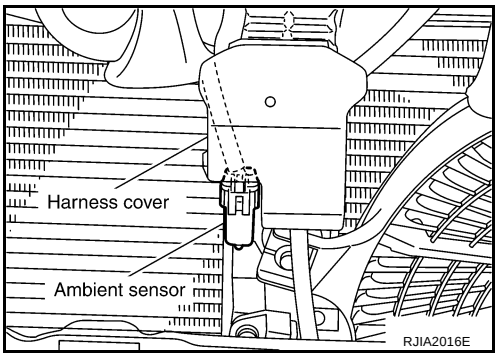

INSTALLATION

Installation is basically the reverse order of removal.

IN-VEHICLE SENSOR

PFP:27720

Removal and Installation

AJS0015B

REMOVAL

1. Remove instrument driver lower panel. Refer to IP-11, "Removal and Installation" .
2. Remove mounting screw, and then remove in-vehicle sensor.

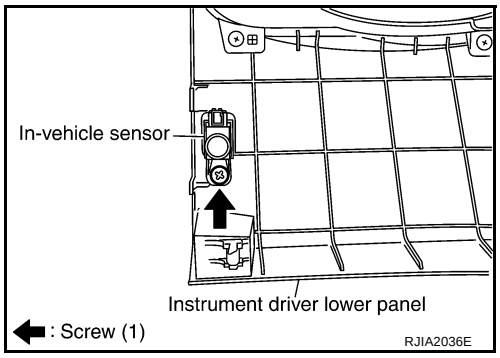

INSTALLATION

Installation is basically the reverse order of removal.

SUNLOAD SENSOR

PFP:27721

Removal and Installation

AJS0015C

REMOVAL

1. Remove front defroster grille (right side). Refer to IP-11, "Removal and Installation" .
2. Disconnect sunload sensor connector, and then remove the sunload sensor.

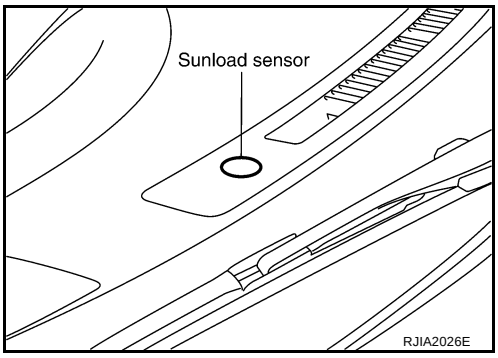

INSTALLATION

Installation is basically the reverse order of removal.

INTAKE SENSOR

PFP:27723

Removal and Installation

AJS0015D

REMOVAL

1. Remove low-pressure pipe 2 and high-pressure pipe 3. Refer to ATC-152, "Removal and Installation of Low-Pressure Pipe 2 and High-Pressure Pipe 3" .

   CAUTION:
   Cap or wrap the joint of the pipe with suitable material such as vinyl tape to avoid the entry of air.

2. Slide evaporator to passenger side, and then remove intake sensor.

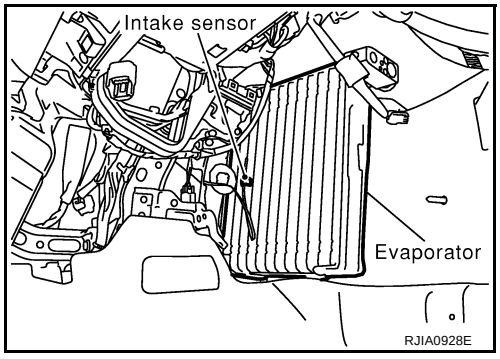

INSTALLATION

Installation is basically the reverse order of removal.

CAUTION:

- **Replace O-rings of A/C piping with new ones, and then apply compressor oil to it when installing it.**
- **Mark the mounting position of intake sensor bracket prior to removal so that the reinstalled sensor can be located in the same position.**
- **Connection point for female-side piping is thin. So, when inserting male-side piping, take care not to deform female-side piping. Slowly insert in axial direction.**
- **Insert one-touch joint connection point securely until it clicks.**
- **After piping has been connected, pull male-side piping by hand to make sure piping does not come off.**
- **When recharging refrigerant, check for leaks.**

BLOWER UNIT

PFP:27200

Removal and Installation

AJS0015E

REMOVAL

1. Remove instrument passenger lower panel. Refer to IP-11, "Removal and Installation" .
2. Remove mounting nuts, and then remove ECM with bracket attached.
3. Disconnect intake door motor connector and blower fan motor connector.
4. Remove harness clip from blower unit.
5. Remove mounting bolt and screws from blower unit.

   CAUTION:
   Move blower unit rightward, and remove locating pin (1 part) and joint. Then remove blower unit downward.

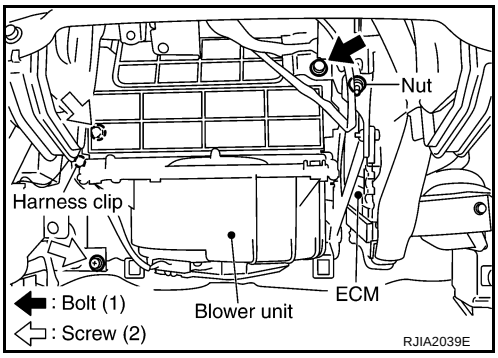

6. Remove blower unit.

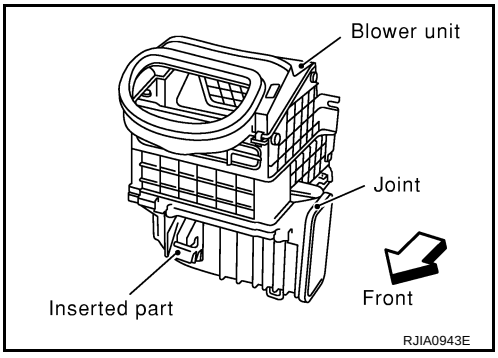

INSTALLATION

Installation is basically the reverse order of removal.

CAUTION:
Make sure locating pin (1 part) and joint are securely inserted.

Disassembly and Assembly

AJS0015F

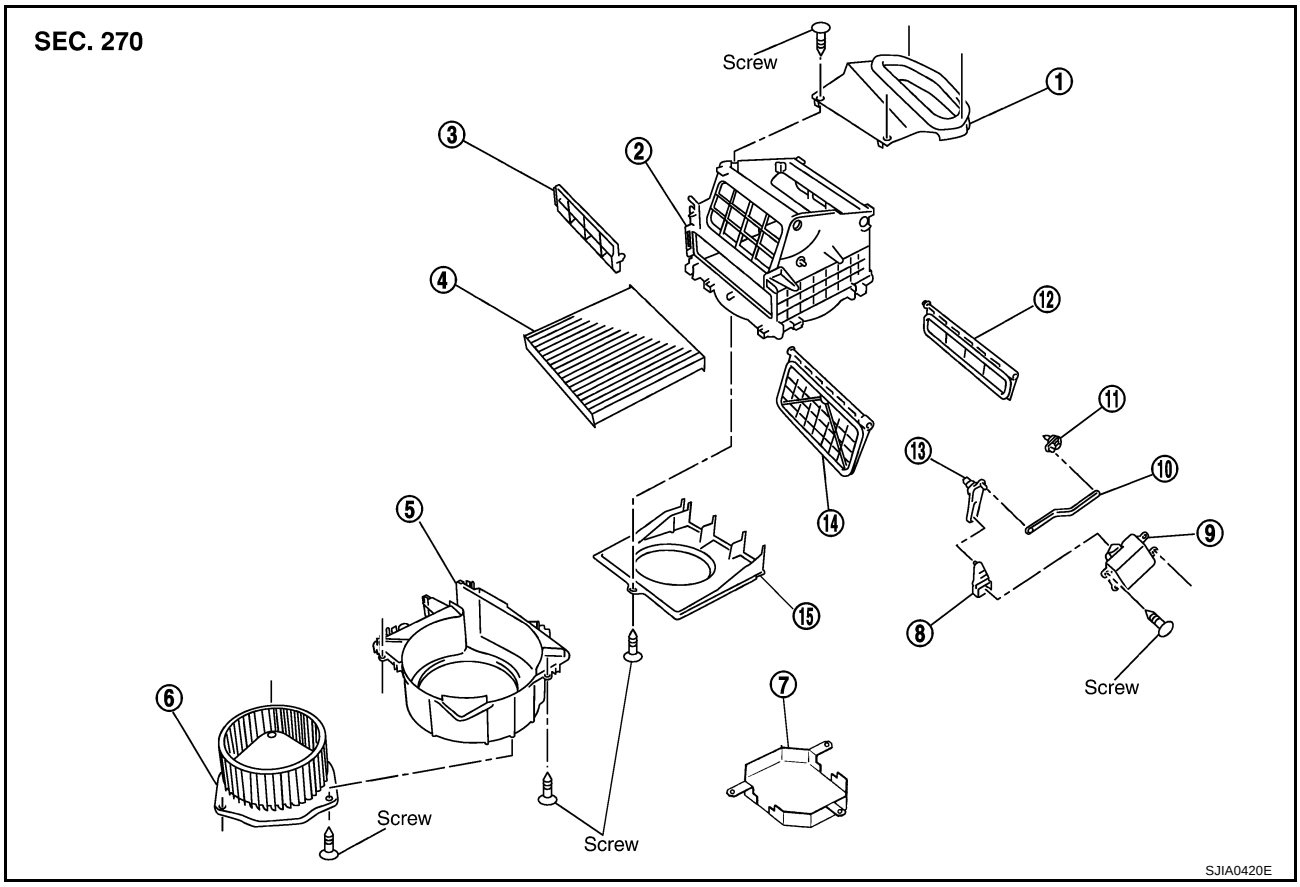

1.	Adapter	2.	Intake upper case	3.	Filter cover
4.	In-cabin microfilter	5.	Intake lower case	6.	Blower motor assembly
7.	Motor cover	8.	Intake door lever 2	9.	Intake door motor
10.	Intake door link	11.	Intake door lever 3	12.	Intake door 2
13.	Intake door lever 1	14.	Intake door 1	15.	Intake bell mouth

BLOWER MOTOR

PFP:27226

Removal and Installation

AJS0015G

REMOVAL

1. Remove instrument lower cover. Refer to IP-11, "Removal and Installation" .
2. Disconnect blower motor connector.
3. Remove mounting screws, and then remove blower motor.

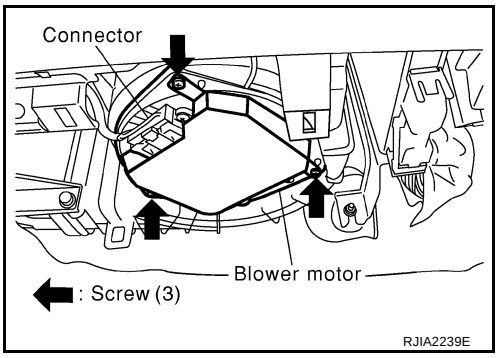

INSTALLATION

Installation is basically the reverse order of removal.

INTAKE DOOR MOTOR

PFP:27730

Removal and Installation

AJS0015H

REMOVAL

1. Remove blower unit. Refer to ATC-121, "BLOWER UNIT" .
2. Remove mounting screws, and then remove intake door motor from blower unit.

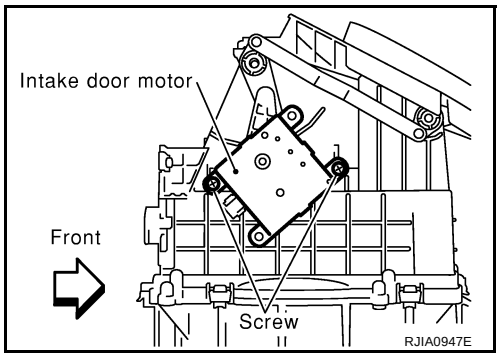

INSTALLATION

Installation is basically the reverse order of removal.

IN-CABIN MICROFILTER

PFP:27277

Removal and Installation

AJS001FC

FUNCTION

Air inside passenger compartment is kept clean at either recirculation or fresh mode by installing in-cabin microfilter into blower unit.

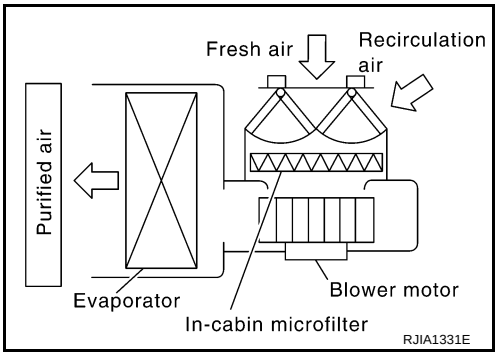

REPLACEMENT TIMING

Replace in-cabin microfilter.
Refer to MA-9, "CHASSIS AND BODY MAINTENANCE" in Schedule 1 and MA-11, "CHASSIS AND BODY MAINTENANCE" in Schedule 2.
Caution label is fixed inside glove box.

REPLACEMENT PROCEDURES

1. Remove instrument passenger lower panel. Refer to IP-11, "Removal and Installation" .
2. Remove filter cover, and then remove in-cabin microfilter.
3. Take out in-cabin microfilter from blower unit.
4. Replace with new one and reinstall on blower unit.
5. Reinstall instrument passenger lower panel.

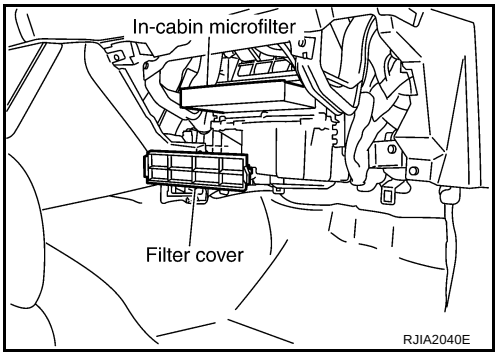

HEATER & COOLING UNIT ASSEMBLY

PFP:27110

Removal and Installation

AJS0015J

REMOVAL

1. Use a refrigerant collecting equipment (for HFC-134a) to discharge refrigerant.
2. Drain coolant from cooling system. Refer to CO-11, "Changing Engine Coolant" (VQ35DE) or CO-37, "Changing Engine Coolant" (VK45DE).
3. Remove cowl top cover. Refer to EI-23, "COWL TOP" .
4. Remove high-pressure pipe 2 mounting clip.
5. Remove low-pressure flexible hose bracket mounting bolt.
6. Disconnect low-pressure pipe 1 and high-pressure pipe 2 from evaporator.

a. Set a disconnector [High-pressure side (SST: 9253089908), Low-pressure side (SST: 9253089916)] on A/C piping.

b. Slide a disconnector toward vehicle front until it clicks.

c. Slide A/C piping toward vehicle front and disconnect it.

CAUTION:

Cap or wrap the joint of the pipe with suitable material such as vinyl tape to avoid the entry of air.

7. Remove electric throttle control actuator (VQ35DE). Refer to EM-19, "INTAKE MANIFOLD COLLECTOR" .

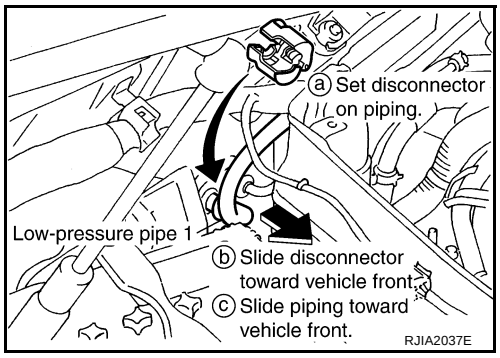

8. Disconnect two heater hoses from heater core.
9. Remove instrument panel assembly. Refer to IP-11, "Removal and Installation" .
10. Remove blower unit. Refer to ATC-121, "BLOWER UNIT" .

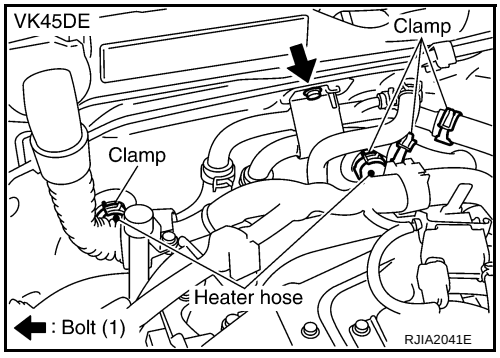

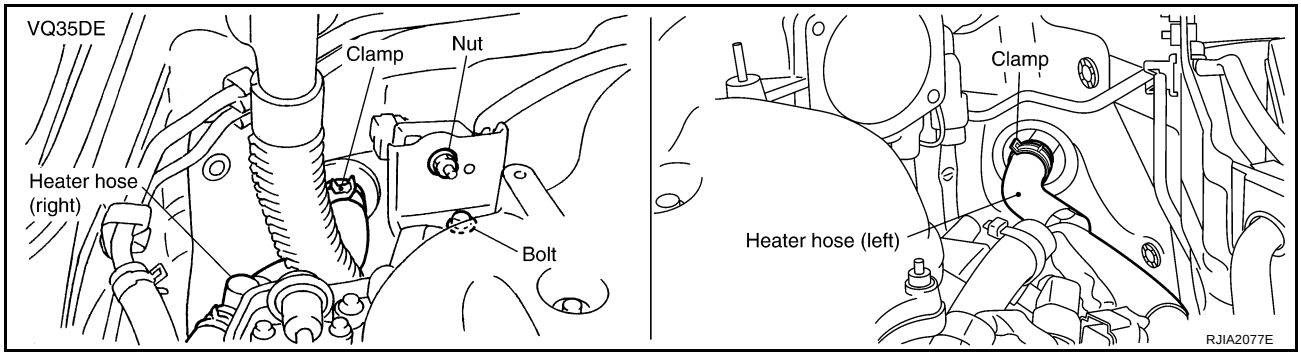

11. Remove mounting nuts and bolts, and then remove instrument stays (left and right side).

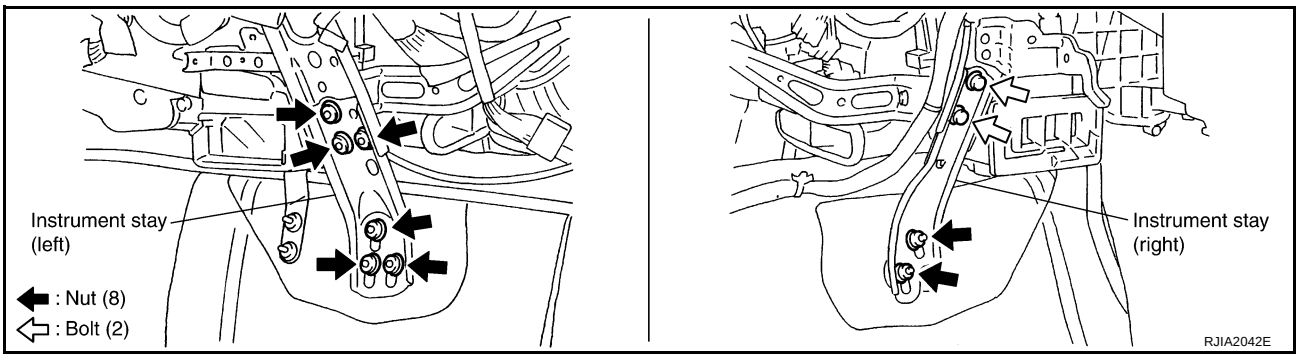

12. Remove mounting bolts from heater & cooling unit assembly.
13. Disconnect drain hose.

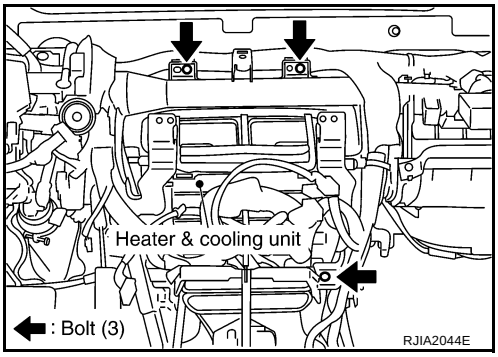

14. Remove ventilator ducts, defroster nozzle and ducts.

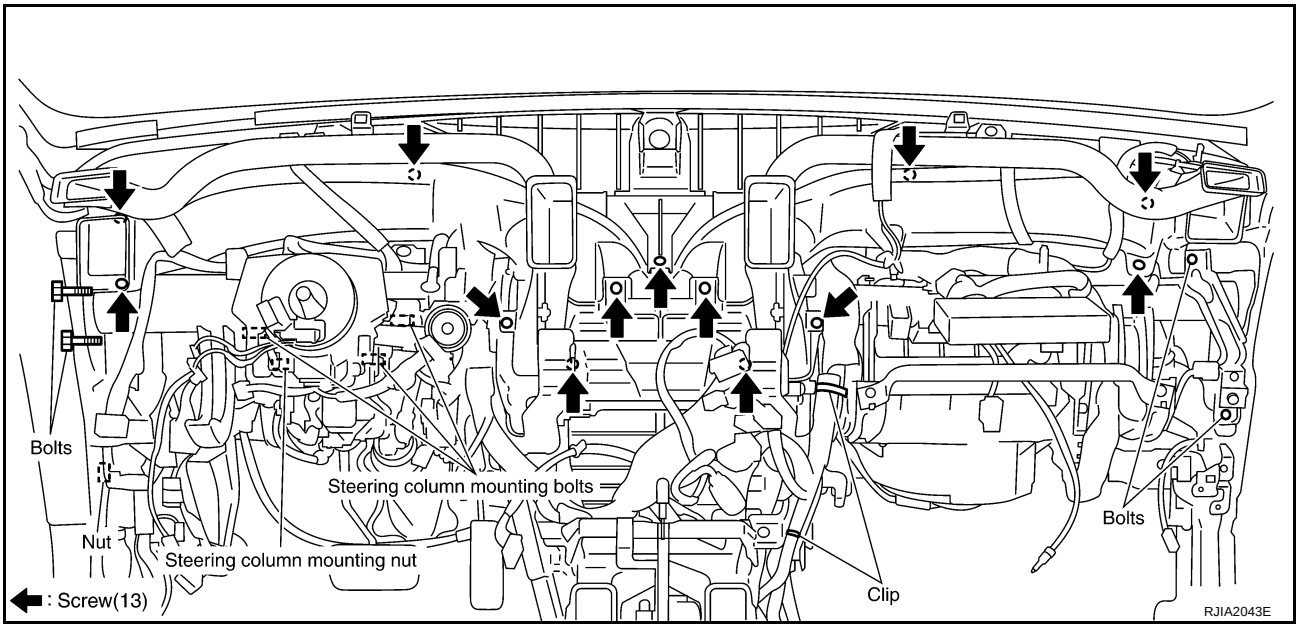

15. Remove steering member mounting bolts, nut and harness clips.
16. Remove the steering member, and then remove heater & cooling unit assembly.

INSTALLATION

Installation is basically the reverse order of removal.

CAUTION:

- **Replace O-rings of A/C piping with new ones, and then apply compressor oil to it when installing it.**
- **Connection point for female-side piping is thin. So, when inserting male-side piping, take care not to deform female-side piping. Slowly insert in axial direction.**
- **Insert one-touch joint connection point securely until it clicks.**
- **After piping has been connected, pull male-side piping by hand to make sure piping does not come off.**

- **When recharging refrigerant, check for leaks.**

NOTE:

- When filling radiator with coolant, refer to CO-11, "Changing Engine Coolant" (VQ35DE) or CO-37, "Changing Engine Coolant" (VK45DE).
- Recharge the refrigerant.

Heater & cooling unit mounting bolt

Tightening torque : 6.8 N·m (0.69 kg-m, 60 in-lb)

Steering member mounting nut and bolt

Tightening torque : 12 N·m (1.2 kg-m, 9 fl-lb)

Disassembly and Assembly

AJS0015K

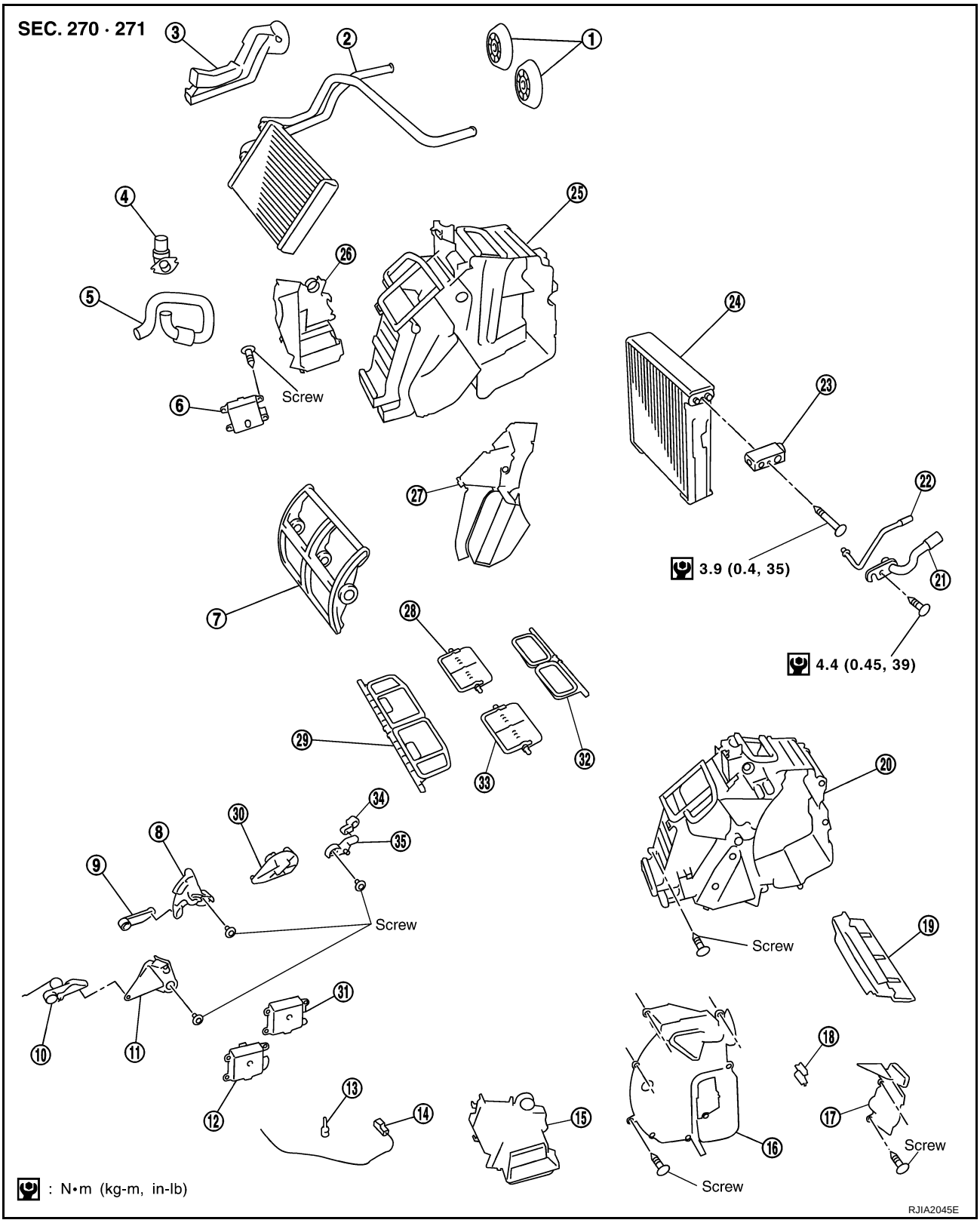

1.	Heater pipe grommet	2.	Heater core	3.	Heater pipe cover
4.	Aspirator	5.	Aspirator hose	6.	Air mix door motor (driver side)
7.	Air mix door (slide door)	8.	Max. cool door link	9.	Max. cool door lever
10.	Ventilator door lever	11.	Ventilator door link	12.	Air mix door motor (passenger side)
13.	Intake sensor bracket	14.	Intake sensor	15.	Foot duct (right)
16.	Evaporator cover	17.	Evaporator cover adaptor	18.	Heater pipe bracket

19. Insulator
20. Heater case (right)
21. Low-pressure pipe 2
22. High-pressure pipe 3
23. Expansion valve
24. Evaporator
25. Heater case (left)
26. Foot duct (left)
27. Center case
28. Max. cool door (left)
29. Ventilator door
30. Side link
31. Mode door motor
32. Defroster door
33. Max. cool door (right)
34. Defroster door lever
35. Defroster door link

MODE DOOR MOTOR

PFP:27731

Removal and Installation

AJS0015L

REMOVAL

1. Remove blower unit. Refer to ATC-121, "BLOWER UNIT" .
2. Remove mounting screws, and then remove mode door motor.
3. Disconnect mode door connector.

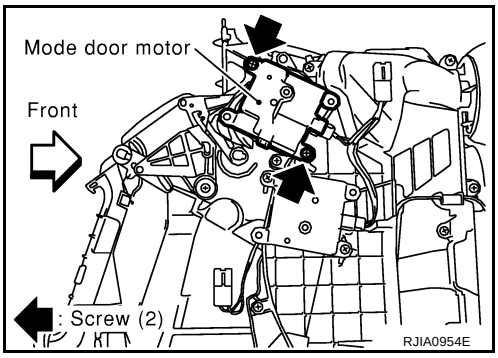

INSTALLATION

Installation is basically the reverse order of removal.

AIR MIX DOOR MOTOR

PFP:27732

Removal and Installation

AJS0015M

REMOVAL

Driver Side

1. Set the temperature (driver side) at 18°C (60°F), and then disconnect the battery cable from the negative terminal.
2. Remove instrument driver lower panel. Refer to IP-11, "Removal and Installation" .
3. Remove mounting screws, and then remove air mix door motor.
4. Disconnect air mix door motor connector.

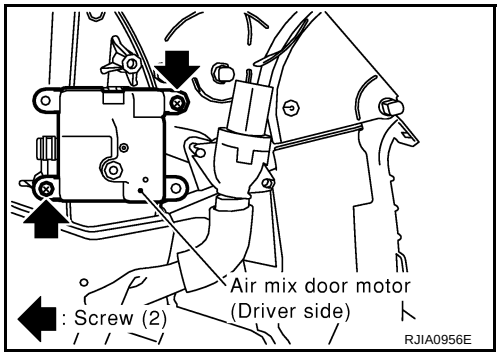

Passenger Side

1. Set the temperature (passenger side) at 18°C (60°F), and then disconnect the battery cable from the negative terminal.
2. Remove blower unit. Refer to ATC-121, "BLOWER UNIT" .
3. Remove mounting screws, and then remove air mix door motor.
4. Disconnect air mix door motor connector.

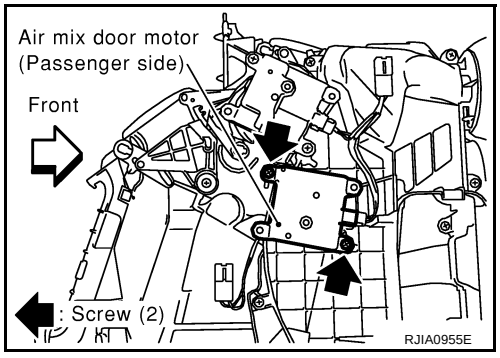

INSTALLATION

Installation is basically the reverse order of removal.

HEATER CORE

PFP:27140

Removal and Installation

AJS0015N

REMOVAL

1. Remove heater & cooling unit assembly. Refer to ATC-126, "HEATER & COOLING UNIT ASSEMBLY" .
2. Remove foot duct (left). Refer to ATC-137, "Removal of Foot Ducts" .
3. Remove heater pipe cover.
4. Remove heater pipe support and heater pipe grommet.
5. Slide heater core to driver side.

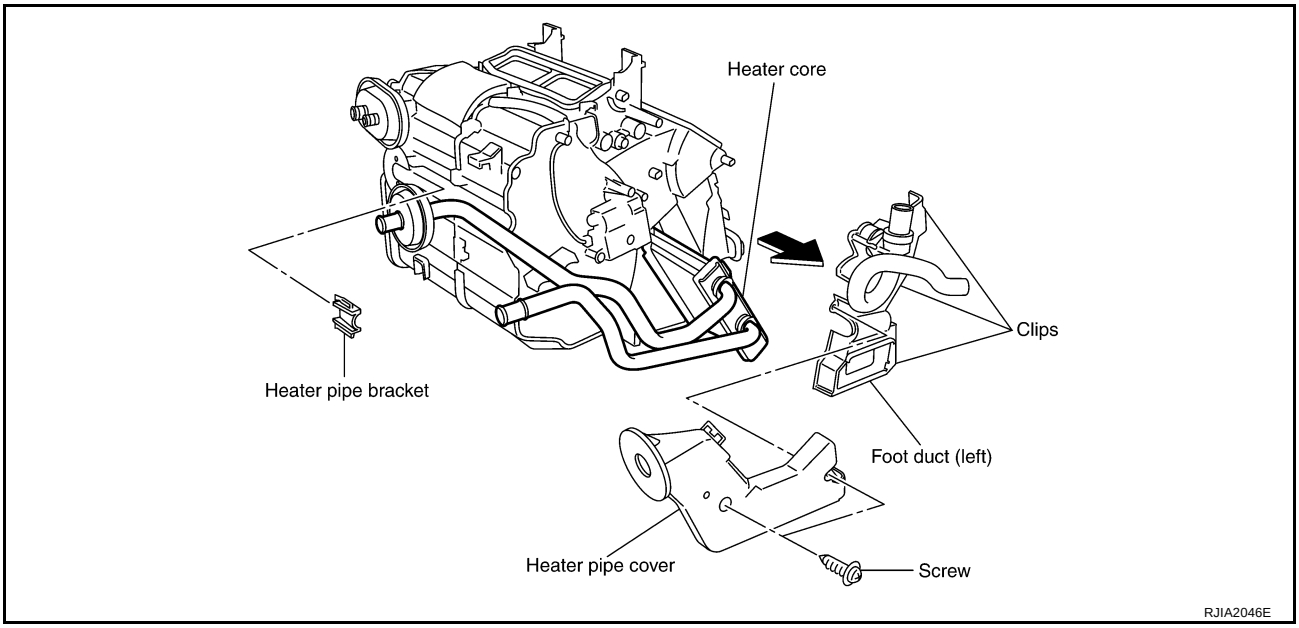

INSTALLATION

Installation is basically the reverse order of removal.

DUCTS AND GRILLES

PFP:27860

Removal and Installation

AJS0015O

REMOVAL

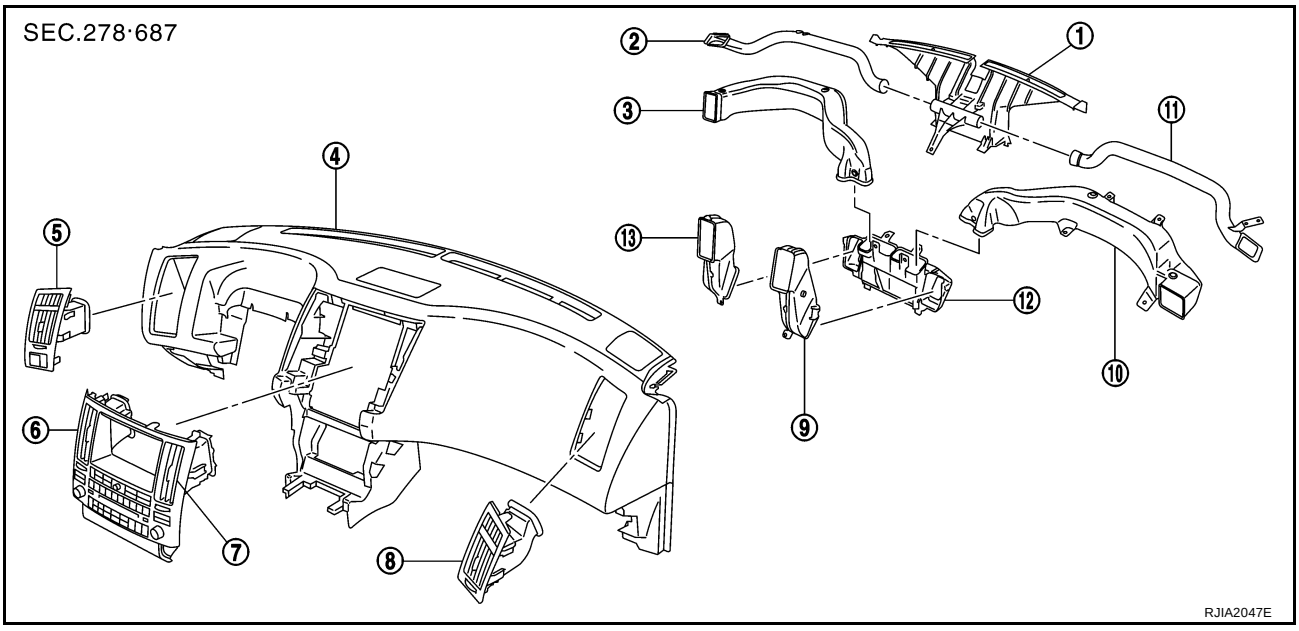

1. Defroster nozzle	2. Side defroster duct (left)	3. Side ventilator duct (left)
4. Instrument panel	5. Side ventilation (left)	6. Center ventilator grille (left)
7. Center ventilator grille (right)	8. Side ventilation (right)	9. Center ventilator duct (right)
10. Side ventilator duct (right)	11. Side defroster duct (right)	12. Center ventilator duct
13. Center ventilator duct (left)		

Removal of Center Ventilator Grille

1. Remove cluster lid C. Refer to IP-11, "Removal and Installation" .
2. Remove mounting screws, and then remove center ventilator grille.

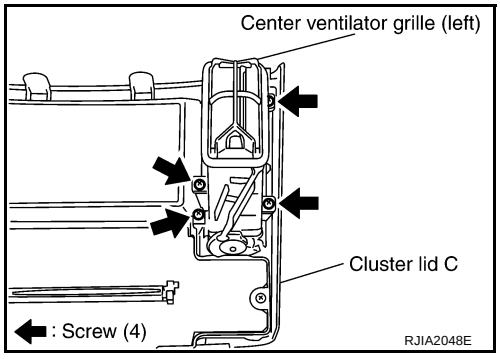

Removal of Side Ventilation

Remove side ventilation. Refer to IP-11, "Removal and Installation" .

Removal of Rear Ventilator Grille

1. Remove center pillar lower garnish. Refer to EI-36, "Removal and Installation" .

2. Remove mounting clips, and then remove rear ventilator grille.

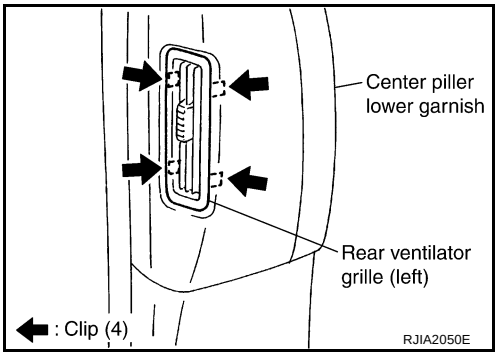

Removal of Defroster Nozzle, Ducts and Ventilator Ducts

1. Remove instrument panel assembly. Refer to IP-11, "Removal and Installation" .
2. Remove mounting screws, and then remove side defroster ducts, using power tools.

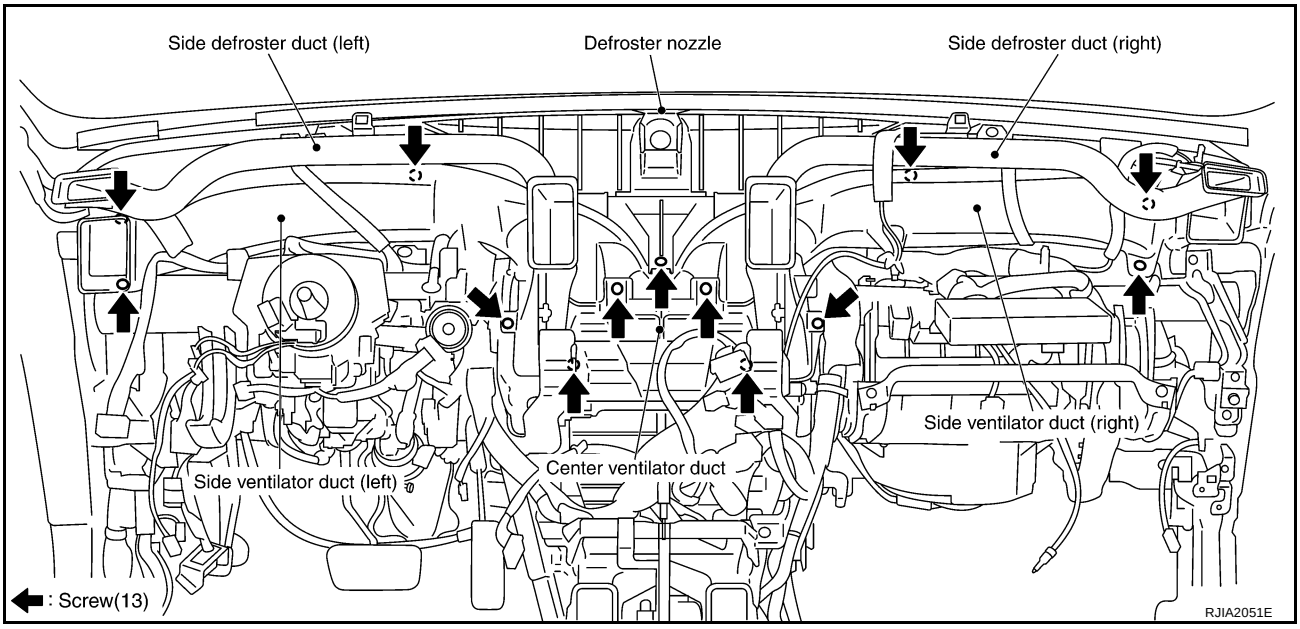

3. Remove mounting screws, and then remove defroster nozzle, using power tools.
4. Remove mounting screws, and then remove side ventilator duct (right and left).
5. Remove mounting screws, and then remove side ventilator ducts.
6. Remove mounting screws, and then remove center ventilator duct.

Removal of Rear Ventilator Ducts

1. Remove center console. Refer to IP-11, "Removal and Installation" .
2. Slide rear ventilator duct 2 toward vehicle front, and then remove it.

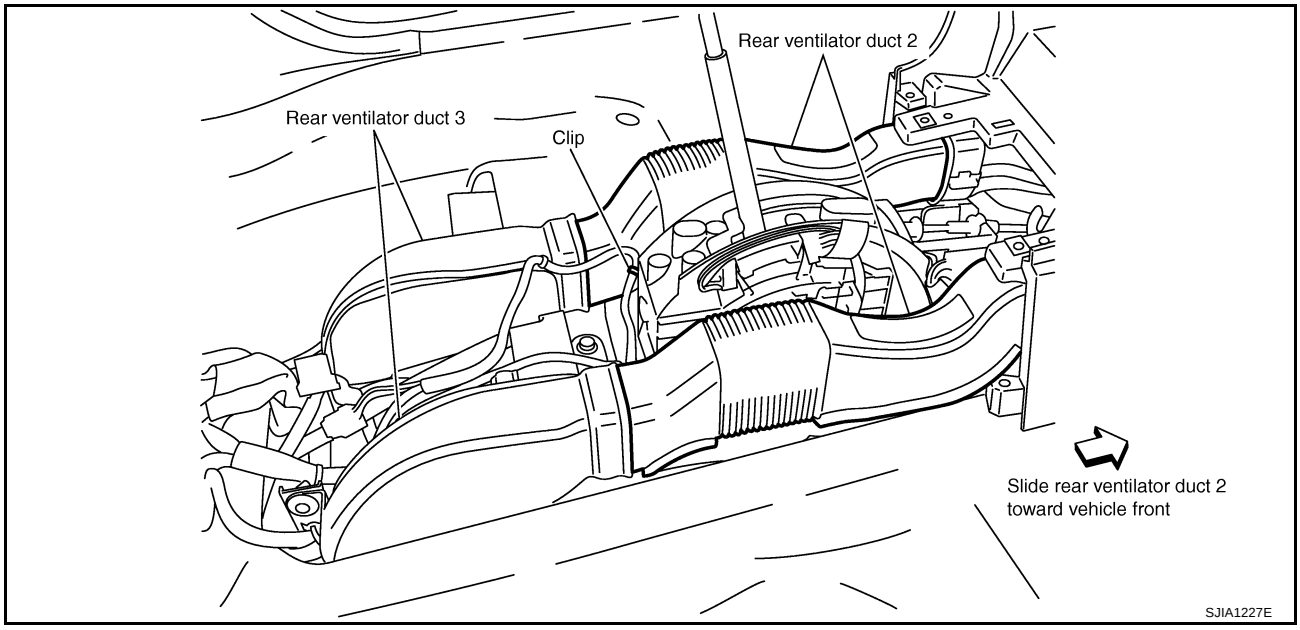

3. Remove floor carpet. Refer to EI-39, "Removal and Installation" .
4. Remove rear ventilator duct 3 mounting clips, and then remove rear ventilator duct 3.

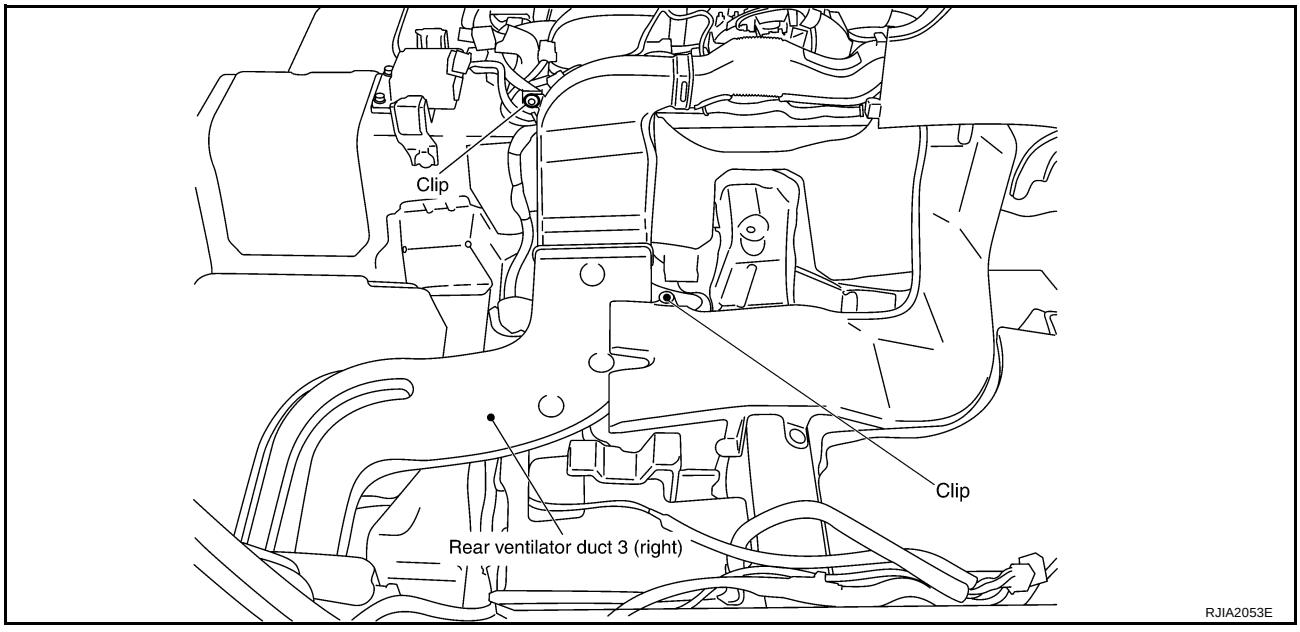

5. Remove instrument panel assembly. Refer to IP-11, "Removal and Installation" .
6. Remove rear ventilator duct 1 with center floor duct attached.
7. Remove rear ventilator duct 1 from center floor duct.

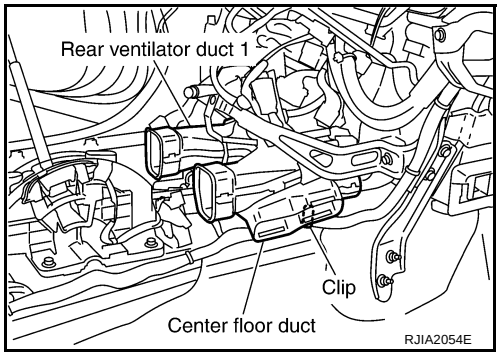

Removal of Foot Ducts

1. Remove heater & cooling unit. Refer to ATC-126, "HEATER & COOLING UNIT ASSEMBLY" .
2. Remove mounting screws, evaporator cover, and then remove foot duct (passenger side).
3. Remove foot duct (driver side).

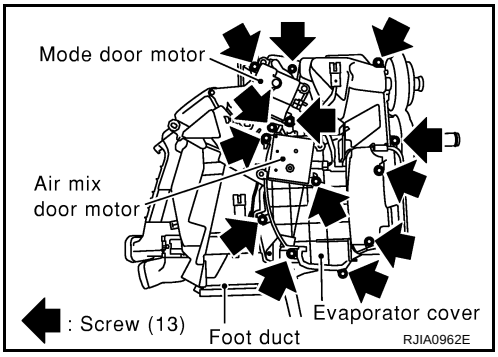

Removal of Floor Ducts

1. Remove floor carpet. Refer to EI-39, "Removal and Installation" .
2. Remove mounting clips from side floor ducts.
3. Remove side floor ducts.
4. Remove instrument panel assembly. Refer to IP-11, "Removal and Installation" .

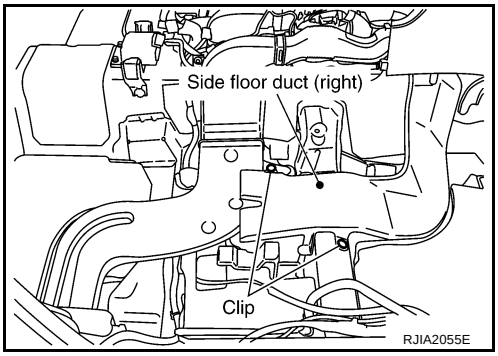

5. Remove center floor duct with rear ventilator duct 1 attached.
6. Remove center floor duct from rear ventilator duct 1.

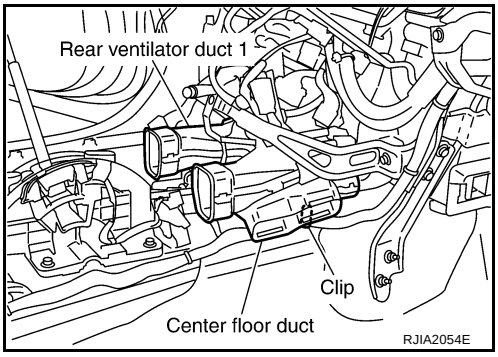

INSTALLATION

Installation is basically the reverse order of removal.

REFRIGERANT LINES

PFP:92600

HFC-134a (R-134a) Service Procedure

AJS0015P

SETTING OF SERVICE TOOLS AND EQUIPMENT

Discharging Refrigerant

WARNING:

Avoid breathing A/C refrigerant and lubricant vapor or mist. Exposure may irritate eyes, nose and throat. Remove HFC-134a (R-134a) from A/C system using certified service equipment meeting requirements of SAE J-2210 [HFC-134a (R-134a) recycling equipment] or J-2209 [HFC-134a (R-134a) recovery equipment]. If accidental system discharge occurs, ventilate work area before resuming service. Additional health and safety information may be obtained from refrigerant and lubricant manufacturers.

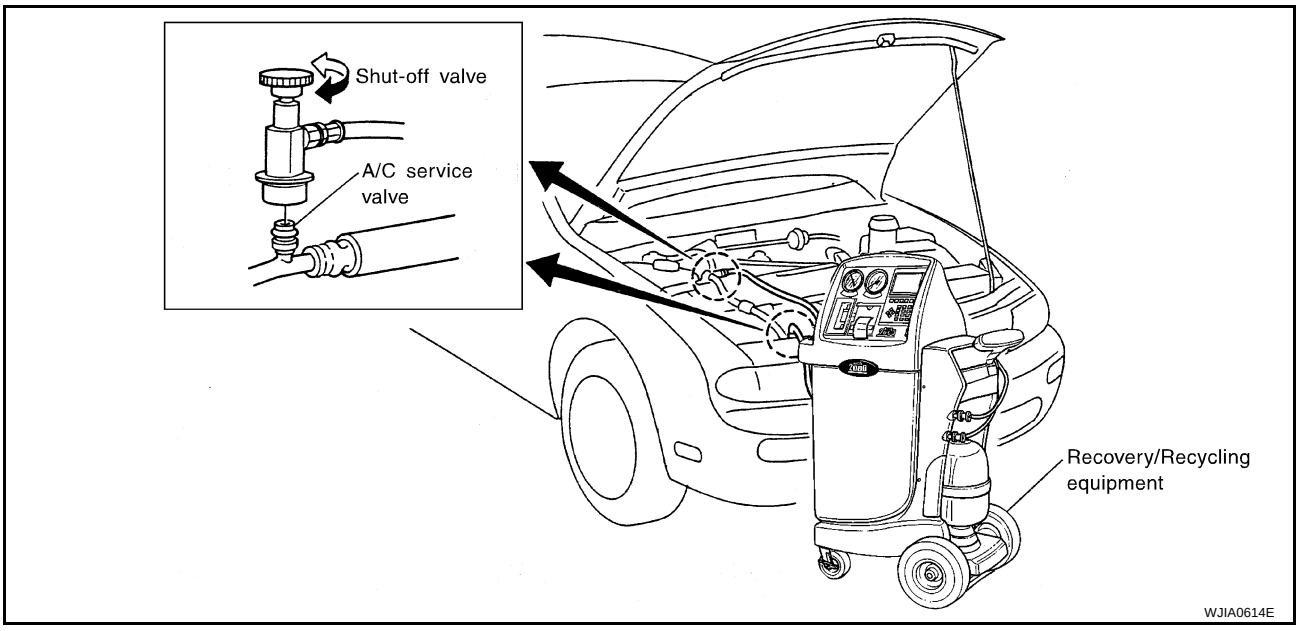

Evacuating System and Charging Refrigerant

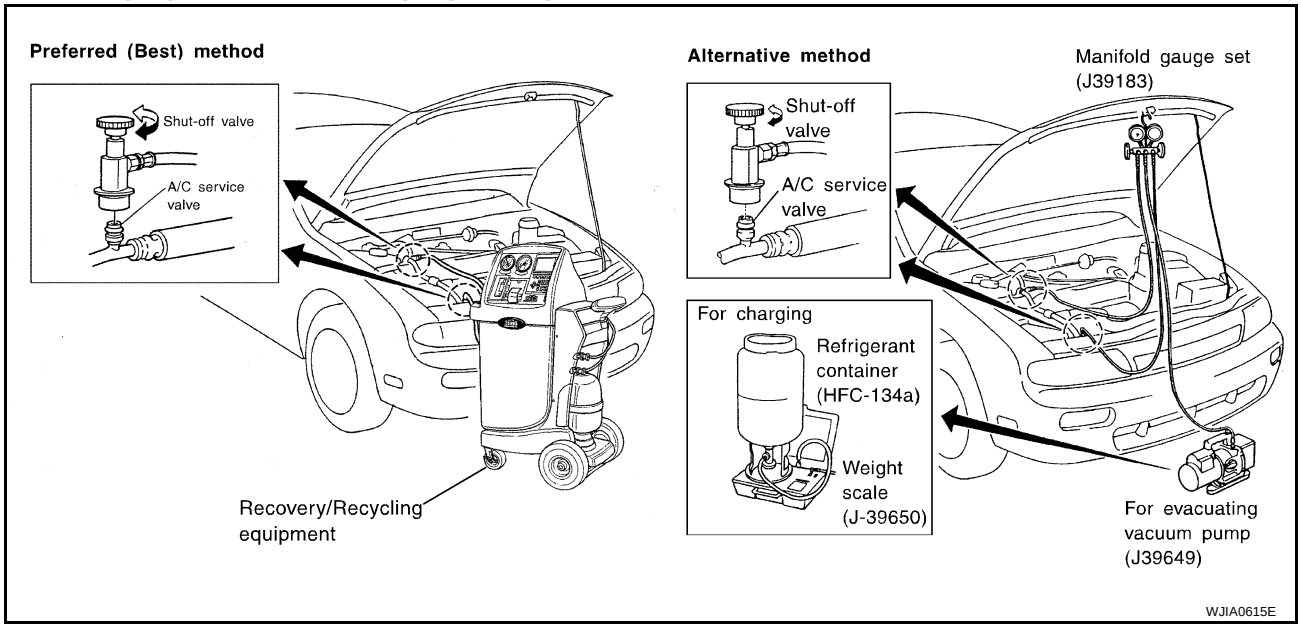

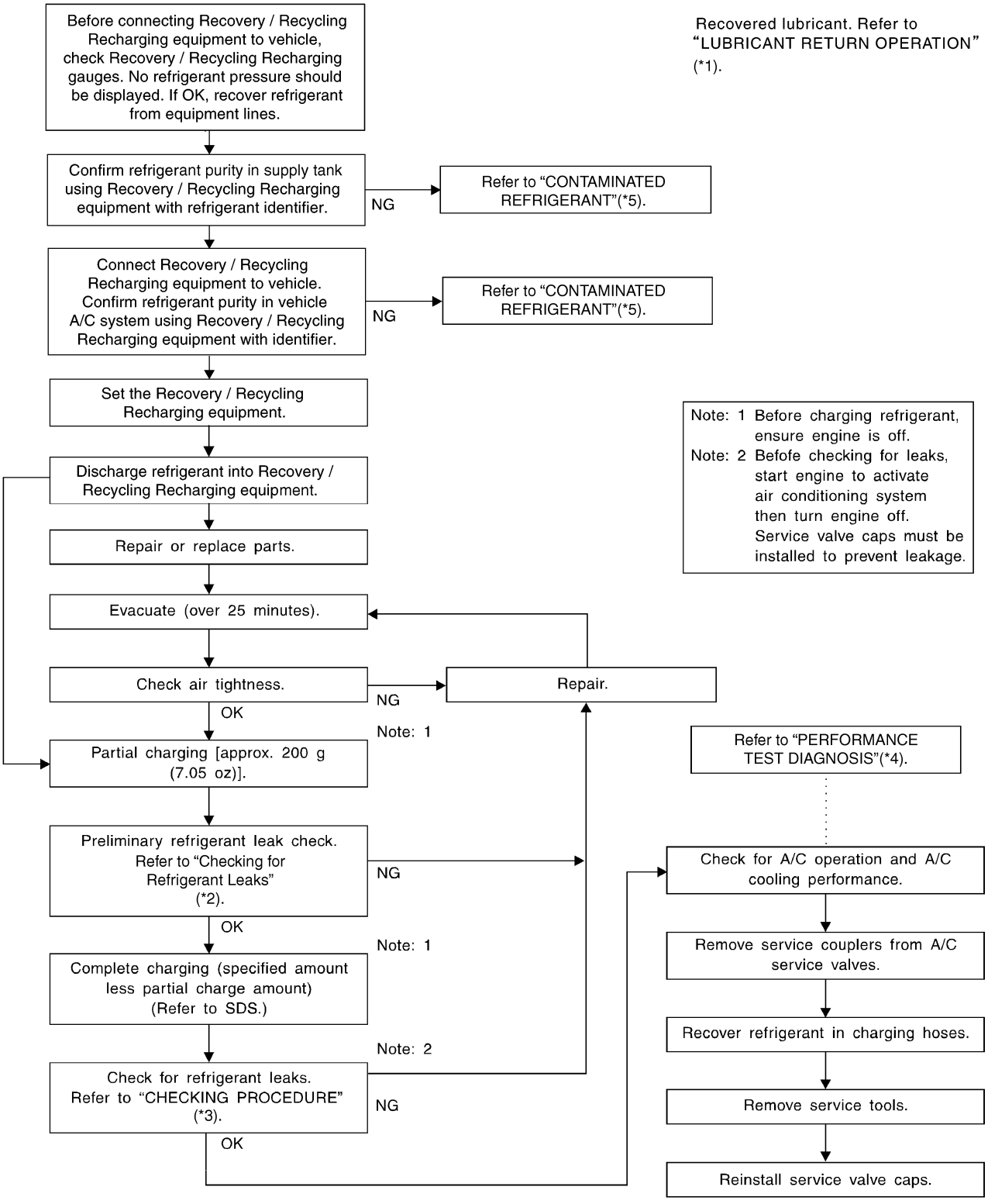

*1 ATC-27, "LUBRICANT RETURN OPERATION"
*2 ATC-158, "Checking for Refrigerant Leaks"
*3 ATC-160, "CHECKING PROCEDURE"
*4 ATC-93, "PERFORMANCE TEST DIAGNOSIS"
*5 ATC-7, "CONTAMINATED REFRIGERANT"

Components

AJS0015Q

Refer to ATC-8, "Precautions for Refrigerant Connection" .

VQ35DE

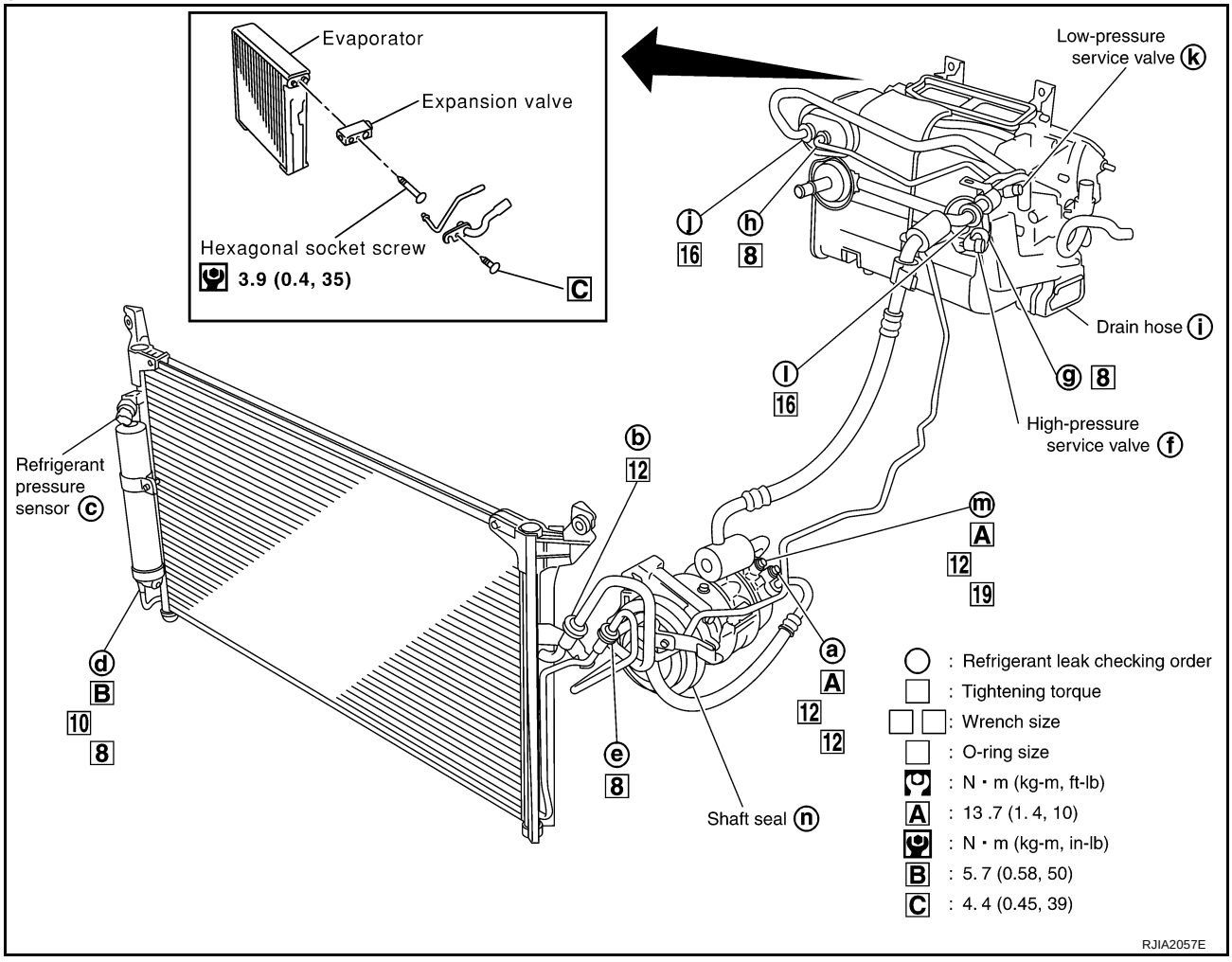

VK45DE

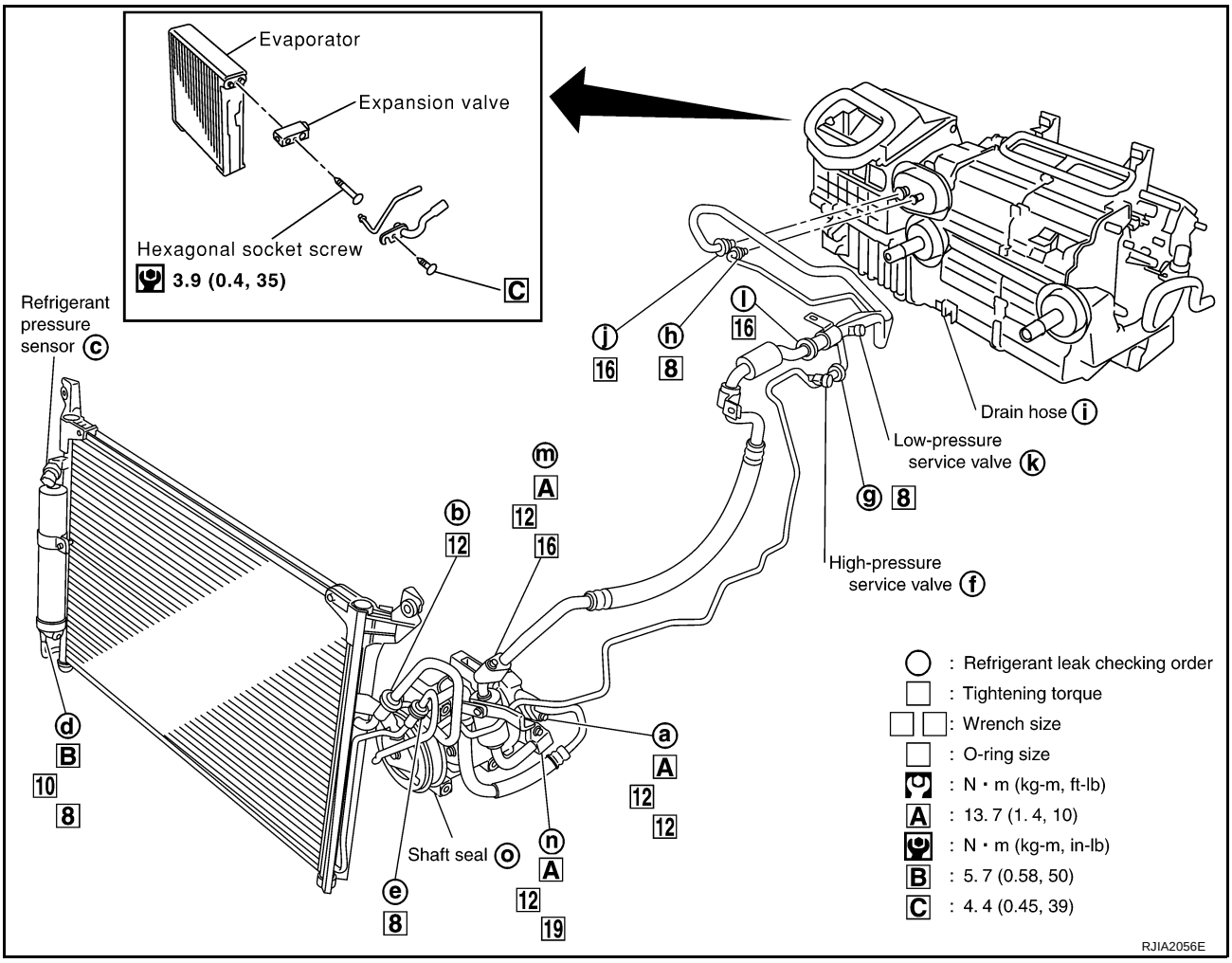

Removal and Installation of Compressor

AJS0015R

REMOVAL

VQ35DE

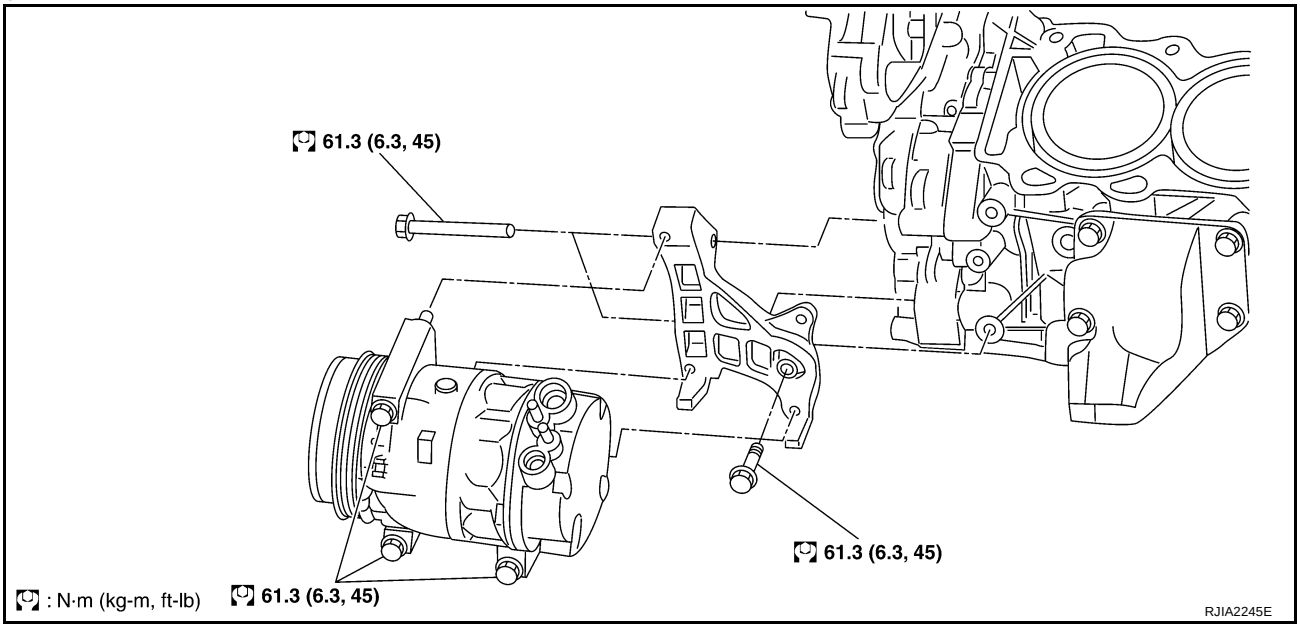

VK45DE

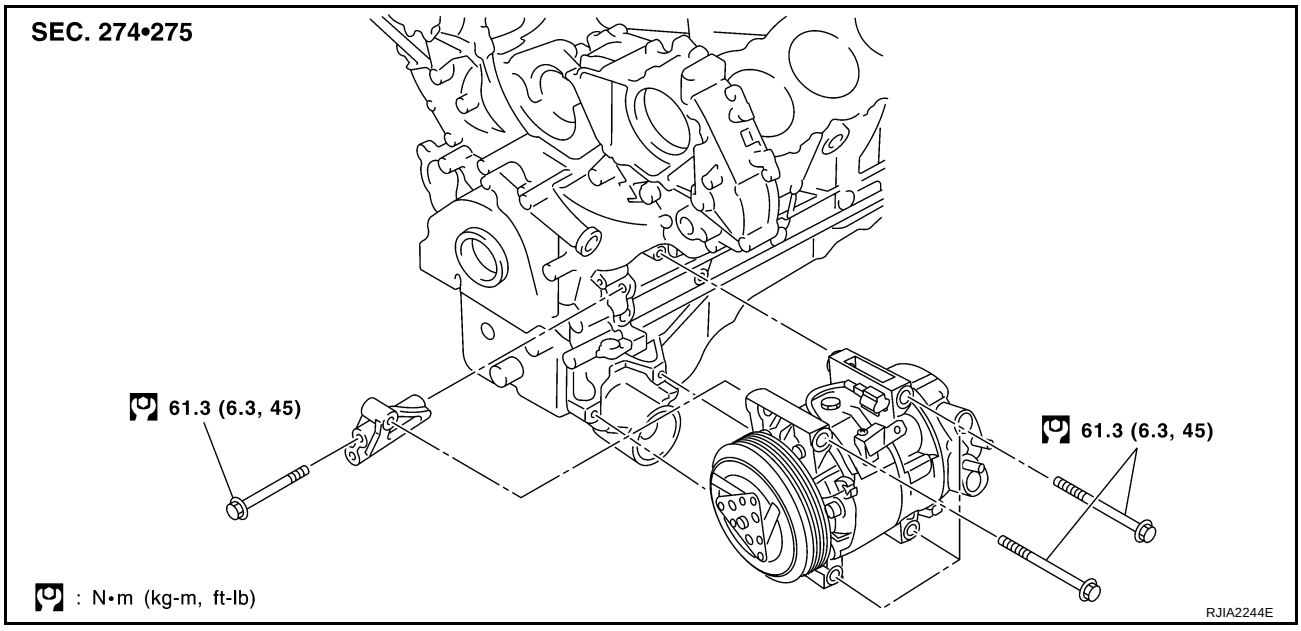

1. Use a refrigerant collecting equipment (for HFC-134a) to discharge the refrigerant.
2. Remove air cleaner case and air duct. Refer to EM-17, "AIR CLEANER AND AIR DUCT" (VQ35DE) or EM-176, "AIR CLEANER AND AIR DUCT" (VK45DE).
3. Remove front engine undercover, using power tools.
4. Remove cooling fan shroud (lower). Refer to CO-41, "RADIATOR" (VK45DE).
5. Remove mounting nuts from low-pressure flexible hose and high-pressure flexible hose.

   CAUTION:
   Cap or wrap the joint of the pipe with suitable material such as vinyl tape to avoid the entry of air.
6. Remove high-pressure flexible hose. Refer to ATC-149, "Removal and Installation of High-Pressure Flexible Hose" (VK45DE).
7. Disconnect compressor connector.

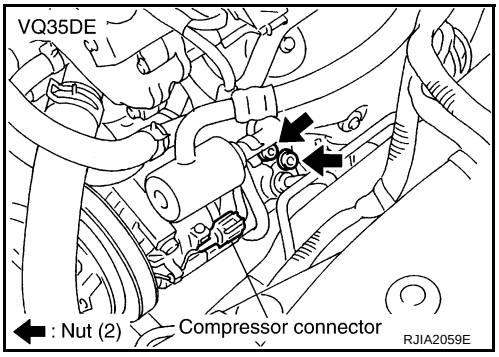

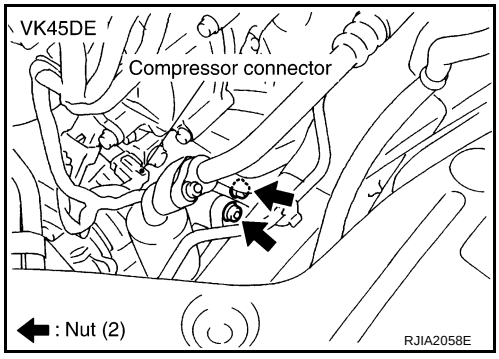

8. Remove A/C compressor belt. Refer to EM-15, "DRIVE BELTS" (VQ35DE) or EM-173, "DRIVE BELTS" (VK45DE).

9. Disconnect compressor (ECV) connector.
10. Remove mounting bolts from compressor, using power tools.
11. Remove compressor downward of the vehicle.

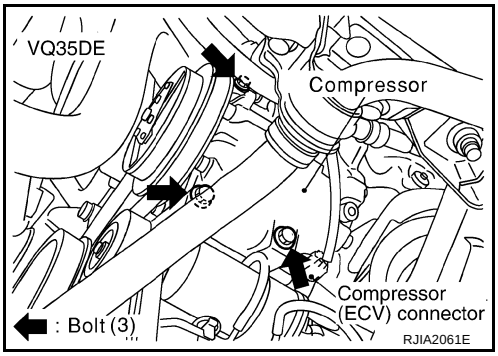

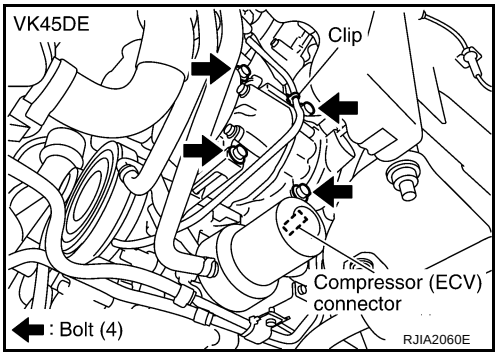

INSTALLATION

Installation is basically the reverse order of removal.

CAUTION:

- **Replace O-rings of low-pressure flexible hose, high-pressure pipe and high-pressure flexible hose with new ones, and then apply compressor oil to it when installing it.**
- **When recharging refrigerant, check for leaks.**

Removal and Installation of Compressor Clutch

AJS001C8

REMOVAL

Overhaul

1. When removing center bolt, hold clutch disc with a clutch disc wrench (SST).

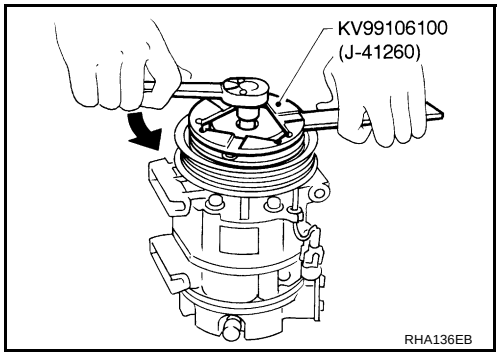

2. Remove clutch disc using a clutch disc puller (SST).

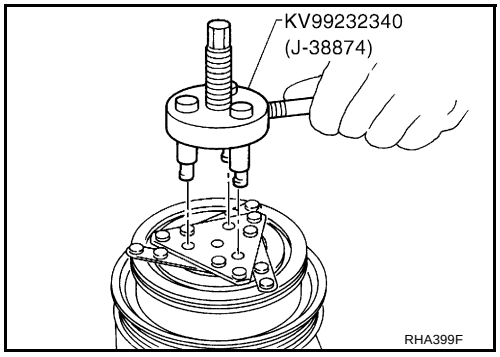

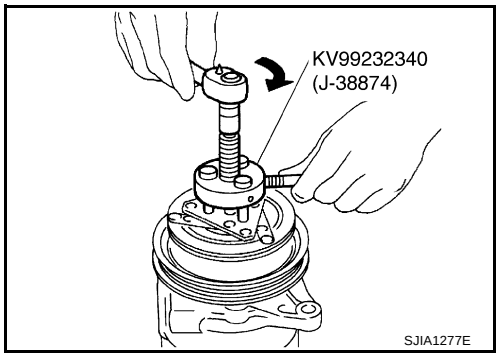

3. Remove snap ring using external snap ring pliers.

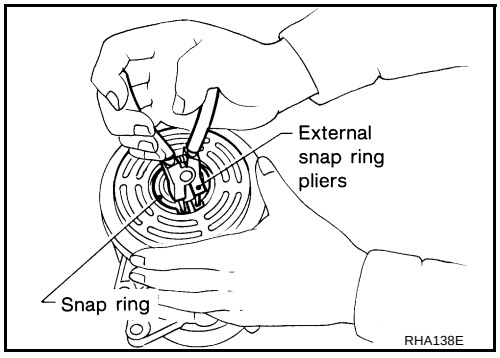

4. Position center pulley puller on the end of drive shaft, and remove pulley assembly using any commercially available pulley puller.
   To prevent pulley groove from being deformed, puller claws should be positioned into edge of the pulley assembly.

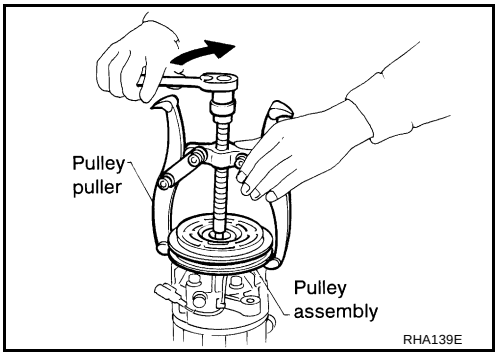

5. Remove field coil harness clip using a pair of pliers.

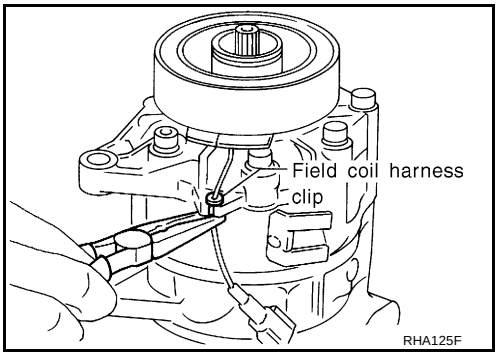

6. Remove snap ring using external snap ring pliers.

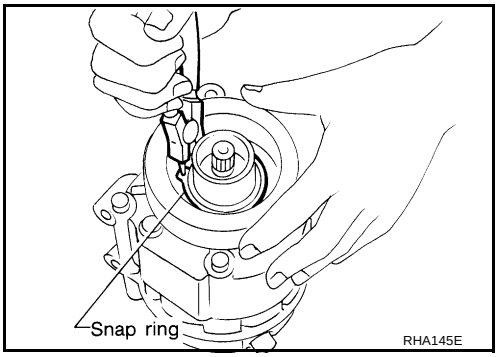

Inspection

Clutch disc
If the contact surface shows signs of damage due to excessive heat, replace clutch disc and pulley.

Pulley
Check appearance of pulley assembly. If contact surface of pulley shows signs of excessive grooving, replace clutch disc and pulley. Contact surfaces of pulley assembly should be cleaned with a suitable solvent before reinstallation.

Coil
Check coil for loose connection or cracked insulation.

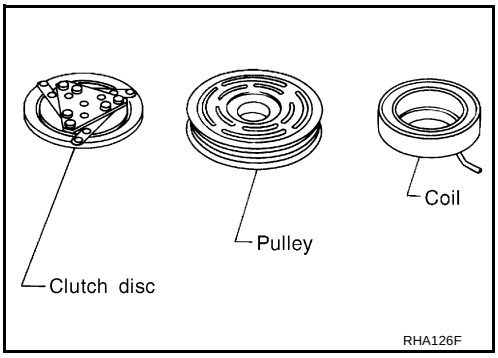

INSTALLATION

1. Install field coil.
   Be sure to align coil's pin with hole in compressor's front head.
2. Install field coil harness clip using a screwdriver.

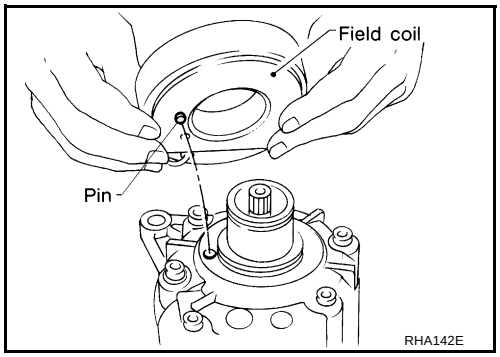

3. Install pulley assembly using pulley installer (SST) and a hand press, and then install snap ring using snap ring pliers.

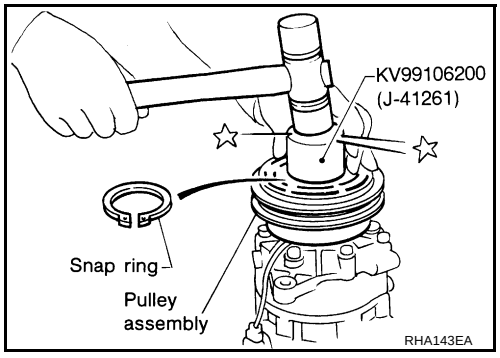

4. Install clutch disc on drive shaft, together with original shim(s). Press clutch disc down by hand.

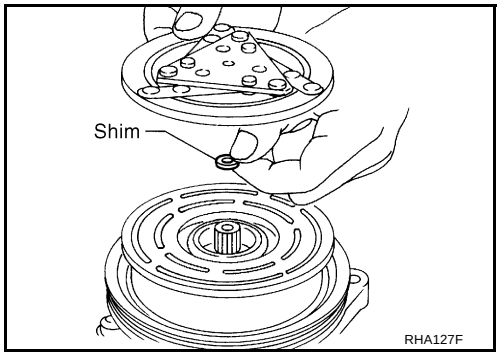

5. Using holder to prevent clutch disc rotation.

   Tightening torque : 14 N·m (1.4 kg-m, 10 ft-lb)

   After tightening bolt, make sure pulley rotates smoothly.

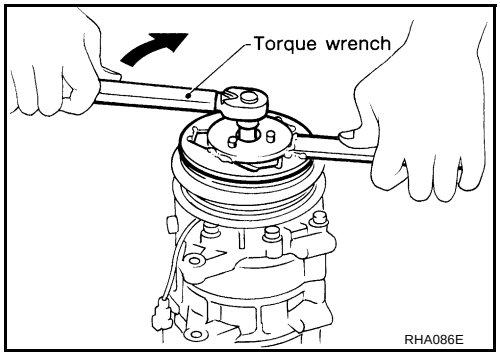

6. Check clearance around entire periphery of clutch disc.

Disc to pulley clearance	**: 0.25 - 0.6 mm (0.010 - 0.024 in)**

If specified clearance is not obtained, replace adjusting spacer and readjust.

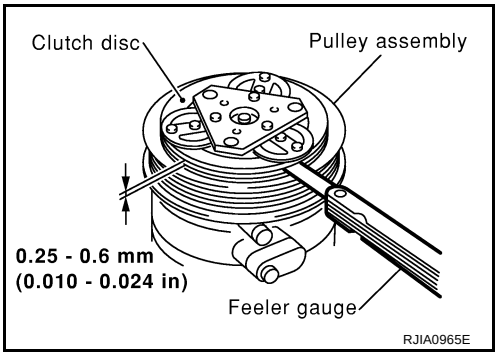

Break-in Operation

When replacing compressor clutch assembly, always carry out break-in operation. This is done by engaging and disengaging the clutch about thirty-times. Break-in operation raises the level of transmitted torque.

Removal and Installation of Low-Pressure Flexible Hose

AJS001BG

REMOVAL

1. Use a refrigerant collecting equipment (for HFC-134a) to discharge the refrigerant.
2. Remove the air cleaner case and air duct. Refer to EM-17, "AIR CLEANER AND AIR DUCT" (VQ35DE) or EM-176, "AIR CLEANER AND AIR DUCT" (VK45DE).
3. Remove low-pressure flexible hose bracket mounting bolt.

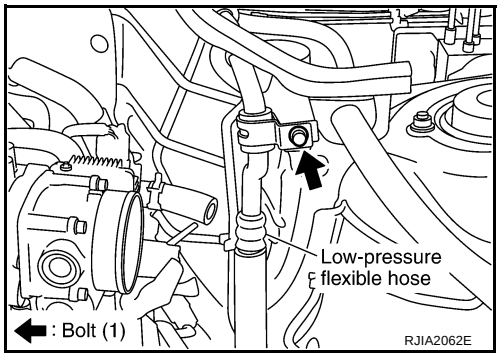

4. Disconnect one-touch joint between low-pressure flexible hose and low-pressure pipe 1.
   a. Set a disconnector (SST: 9253089916) on A/C piping.
   b. Slide a disconnector toward vehicle front until it clicks.
   c. Slide A/C piping toward vehicle front and disconnect it.

   CAUTION:
   Cap or wrap the joint of the pipe with suitable material such as vinyl tape to avoid the entry of air.

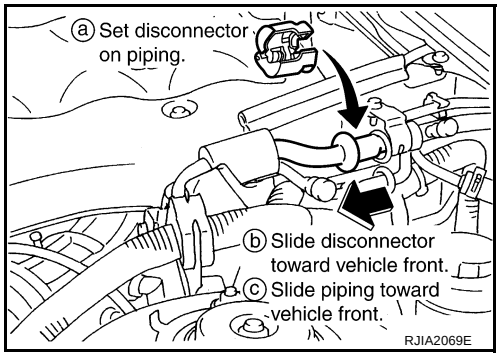

5. Remove mounting nut from low-pressure flexible hose.

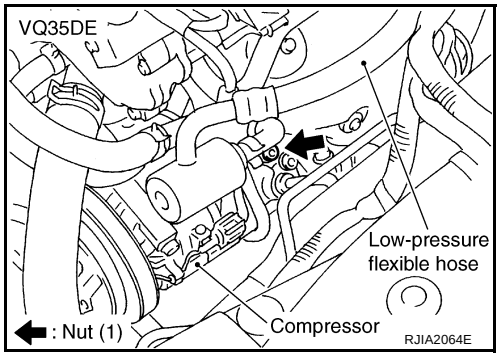

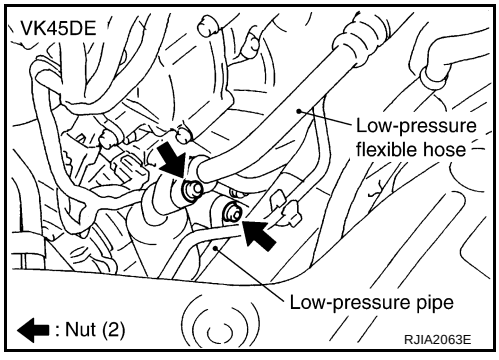

6. Remove low-pressure flexible hose.

   CAUTION:
   Cap or wrap the joint of the pipe with suitable material such as vinyl tape to avoid the entry of air.
7. Remove mounting nut, and then remove low-pressure pipe (VK45DE).

INSTALLATION

Installation is basically the reverse order of removal.

CAUTION:

- **Replace O-rings of A/C piping with new ones, and then apply compressor oil to it when installing it.**
- **Connection point for female-side piping is thin. So, when inserting male-side piping, take care not to deform female-side piping. Slowly insert in axial direction.**
- **Insert one-touch joint connection point securely until it clicks.**
- **After piping has been connected, pull male-side piping by hand to make sure piping does not come off.**
- **When recharging refrigerant, check for leaks.**

Low-pressure flexible hose bracket mounting bolt

Tightening torque : 5.5 N·m (0.56 kg-m, 49 in-lb)

Removal and Installation of High-Pressure Flexible Hose

AJS0015U

REMOVAL

1. Use a refrigerant collecting equipment (for HFC-134a) to discharge the refrigerant.
2. Remove air cleaner case and air duct. Refer to EM-17, "AIR CLEANER AND AIR DUCT" (VQ35DE) or EM-176, "AIR CLEANER AND AIR DUCT" (VK45DE).
3. Remove mounting bolt from high-pressure flexible hose bracket.

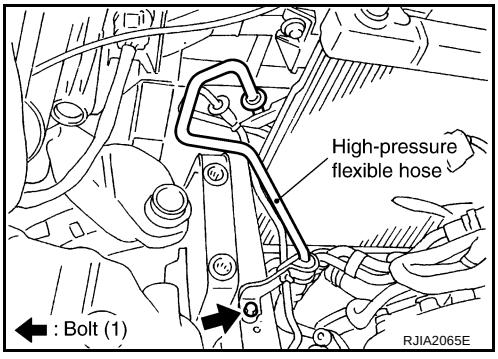

4. Disconnect one-touch joint between high-pressure flexible hose and condenser.

a. Set a disconnector (SST: 9253089912) on A/C piping.
b. Slide a disconnector upward until it clicks.
c. Slide A/C piping upward and disconnect it.

CAUTION:
Cap or wrap the joint of the pipe with suitable material such as vinyl tape to avoid the entry of air.

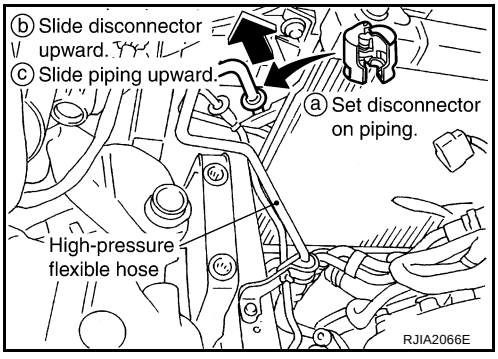

5. Remove mounting nut from high-pressure flexible hose (compressor side), and then remove high-pressure flexible hose.

CAUTION:
Cap or wrap the joint of the pipe with suitable material such as vinyl tape to avoid the entry of air.

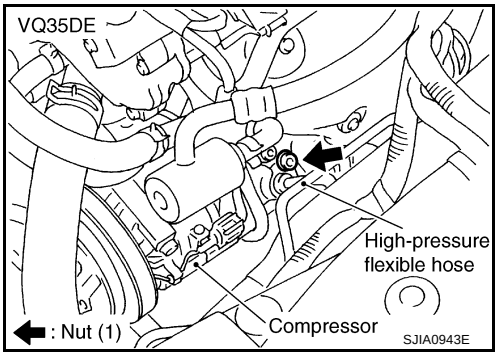

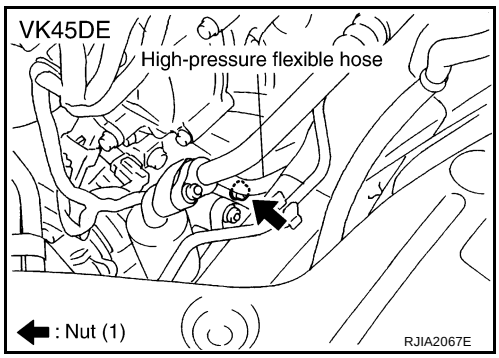

INSTALLATION

Installation is basically the reverse order of removal.

CAUTION:

- **Replace O-rings of high-pressure flexible hose with new ones, and then apply compressor oil to it when installing it.**
- **Connection point for female-side piping is thin. So, when inserting male-side piping, take care not to deform female-side piping. Slowly insert in axial direction.**
- **Insert one-touch joint connection point securely until it clicks.**
- **After piping has been connected, pull male-side piping by hand to make sure piping does not come off.**
- **When recharging refrigerant, check for leaks.**

High-pressure flexible hose bracket mounting bolt

Tightening torque : 5.5 N·m (0.56 kg-m, 49 in-lb)

Removal and Installation of Low-Pressure Pipe 1 (Engine Compartment)

AJS0015V

REMOVAL

1. Use a refrigerant collecting equipment (for HFC-134a) to discharge the refrigerant.
2. Remove cowl top cover. Refer to EI-23, "COWL TOP" .
3. Remove mounting bolt from low-pressure pipe 1 bracket and low-pressure flexible hose bracket.

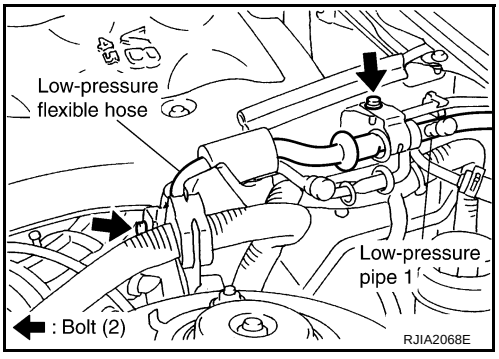

4. Disconnect one-touch joints.

a. Set a disconnector (SST: 9253089916) on A/C piping.
b. Slide a disconnector toward vehicle front until it clicks.
c. Slide A/C piping toward vehicle front and disconnect it.

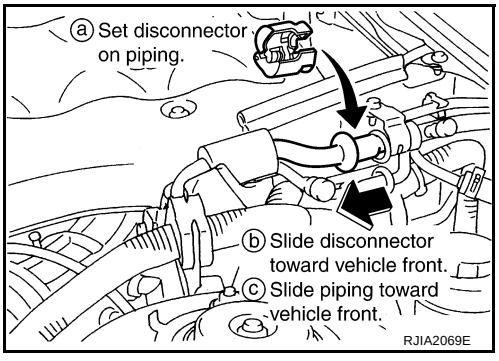

5. Remove low-pressure pipe 1.

CAUTION:
Cap or wrap the joint of the pipe with suitable material such as vinyl tape to avoid the entry of air.

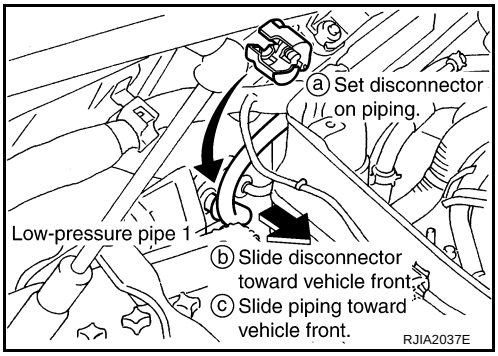

INSTALLATION

Installation is basically the reverse order of removal.

CAUTION:

- **Replace O-rings of low-pressure pipe 1 with new ones, and then apply compressor oil to it when installing it.**
- **Connection point for female-side piping is thin. So, when inserting male-side piping, take care not to deform female-side piping. Slowly insert in axial direction.**
- **Insert one-touch joint connection point securely until it clicks.**
- **After piping has been connected, pull male-side piping by hand to make sure piping does not come off.**
- **When recharging refrigerant, check for leaks.**

Low-pressure pipe 1 bracket and low-pressure flexible hose bracket mounting bolts

Tightening torque : 5.5 N·m (0.56 kg-m, 49 in-lb)

Removal and Installation of High-Pressure Pipe 1 and 2 (Engine Compartment)

AJS001BH

REMOVAL

1. Remove low-pressure pipe 1. Refer to ATC-150, "Removal and Installation of Low-Pressure Pipe 1 (Engine Compartment)" .
2. Remove high-pressure flexible hose and low-pressure flexible hose. Refer to ATC-149, "Removal and Installation of High-Pressure Flexible Hose" and ATC-148, "Removal and Installation of Low-Pressure Flexible Hose" .
3. Remove high-pressure pipe 1 and 2 from clips.

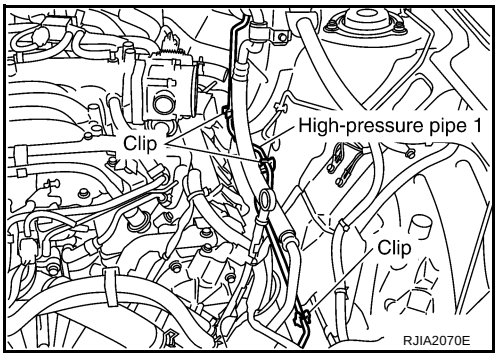

4. Disconnect one-touch joint between condenser and high-pressure pipe 1.

a. Set a disconnector (SST: 9253089908) on A/C piping.
b. Slide a disconnector upward until it clicks.
c. Slide A/C piping upward and disconnect it.

CAUTION:
Cap or wrap the joint of the pipe with suitable material such as vinyl tape to avoid the entry of air.

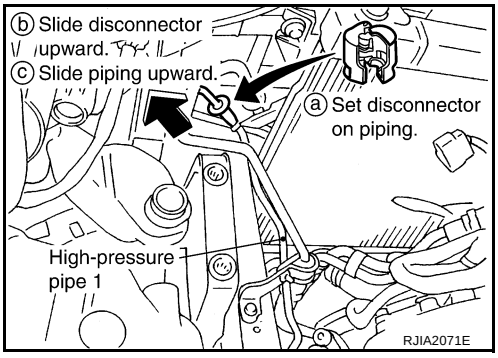

5. Disconnect one-touch joint between high-pressure pipe 1 and 2.
a. Set a disconnector (SST: 9253089908) on A/C piping.
b. Slide a disconnector toward vehicle rear until it clicks.
c. Slide A/C piping toward vehicle rear and disconnect it.

CAUTION:
Cap or wrap the joint of the pipe with suitable material such as vinyl tape to avoid the entry of air.

6. Remove high-pressure pipe 1.

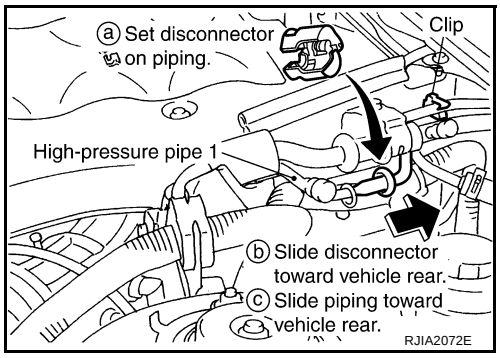

7. Disconnect one-touch joint between high-pressure pipe 2 and 3.
a. Set a disconnector (SST: 9253089908) on A/C piping.
b. Slide a disconnector toward vehicle front until it clicks.
c. Slide A/C piping toward vehicle front and disconnect it.
8. Remove high-pressure pipe 2.

CAUTION:
Cap or wrap the joint of the pipe with suitable material such as vinyl tape to avoid the entry of air.

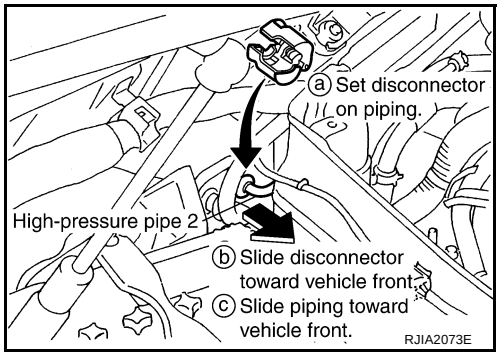

INSTALLATION

Installation is basically the reverse order of removal.

CAUTION:

- **Replace O-rings of high-pressure pipe with new ones, and then apply compressor oil to it when installing it.**
- **Connection point for female-side piping is thin. So, when inserting male-side piping, take care not to deform female-side piping. Slowly insert in axial direction.**
- **Insert one-touch joint connection point securely until it clicks.**
- **After piping has been connected, pull male-side piping by hand to make sure piping does not come off.**
- **When recharging refrigerant, check for leaks.**

Removal and Installation of Low-Pressure Pipe 2 and High-Pressure Pipe 3 AJS001BI

REMOVAL

1. Set the temperature (passenger side) at 18°C (60°F), and then disconnect the battery cable from the negative terminal.
2. Use a refrigerant collecting equipment (for HFC-134a) to discharge the refrigerant.
3. Remove cowl top cover. Refer to EI-23, "COWL TOP" .
4. Remove mounting bolts from low-pressure pipe 1 bracket and low-pressure flexible hose bracket.

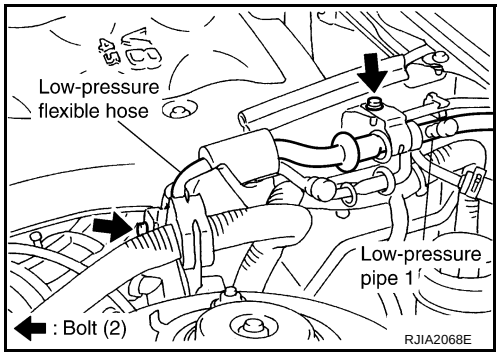

5. Remove high-pressure pipe 1 from vehicle clips.

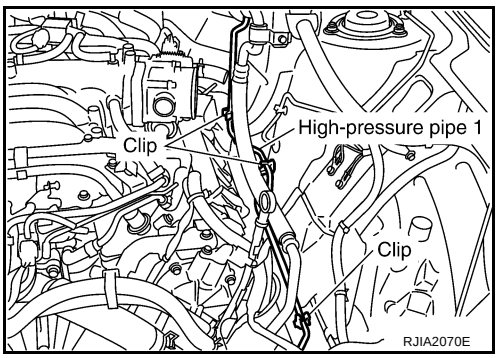

6. Disconnect one-touch joints.
a. Set a disconnector [high-pressure side (SST: 9253089908), low-pressure side (SST: 9253089916)] on A/C piping.
b. Slide a disconnector toward vehicle front until it clicks.
c. Slide A/C piping toward vehicle front and disconnect it.

CAUTION:
Cap or wrap the joint of the pipe with suitable material such as vinyl tape to avoid the entry of air.

7. Remove blower unit. Refer to ATC-121, "BLOWER UNIT" .

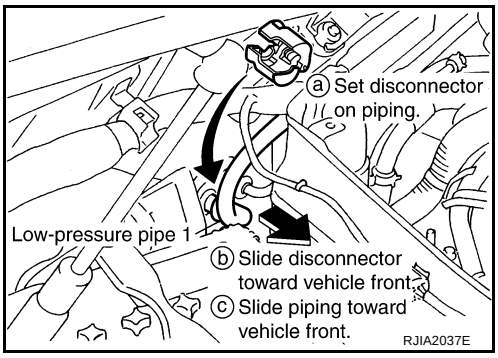

8. Remove air mix door motor (passenger side), mode door motor and evaporator cover.

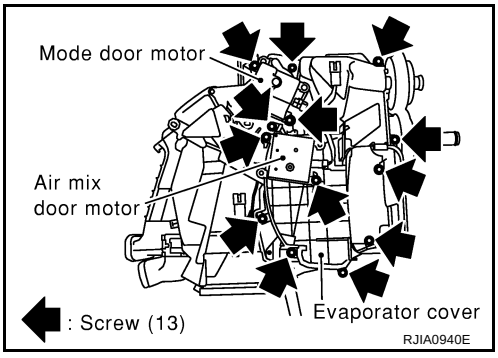

9. Remove mounting bolt, and then remove low-pressure pipe 2 and high-pressure pipe 3.

CAUTION:
Cap or wrap the joint of the pipe with suitable material such as vinyl tape to avoid the entry of air.

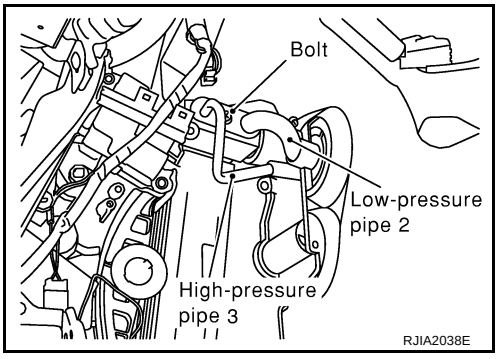

INSTALLATION

Installation is basically the reverse order of removal.

CAUTION:

- **Replace O-rings of A/C piping with new ones, and then apply compressor oil to it when installing it.**
- **Connection point for female-side piping is thin. So, when inserting male-side piping, take care not to deform female-side piping. Slowly insert in axial direction.**
- **Insert one-touch joint connection point securely until it clicks.**
- **After piping has been connected, pull male-side piping by hand to make sure piping does not come off.**

- **When recharging refrigerant, check for leaks.**

Low-pressure pipe 1 bracket and low-pressure flexible hose bracket mounting bolts
Tightening torque : 5.5 N·m (0.56 kg-m, 49 in-lb)

Removal and Installation of Liquid Tank

AJS0015Y

REMOVAL

1. Use a refrigerant collecting equipment (for HFC-134a) to discharge the refrigerant.
2. Remove front grille. Refer to EI-22, "FRONT GRILLE" .
3. Clean liquid tank and its surrounding area, and remove dirt and rust from liquid tank.
   CAUTION:
   Be sure to clean carefully.
4. Remove mounting bolts from liquid tank and power steering oil cooler.

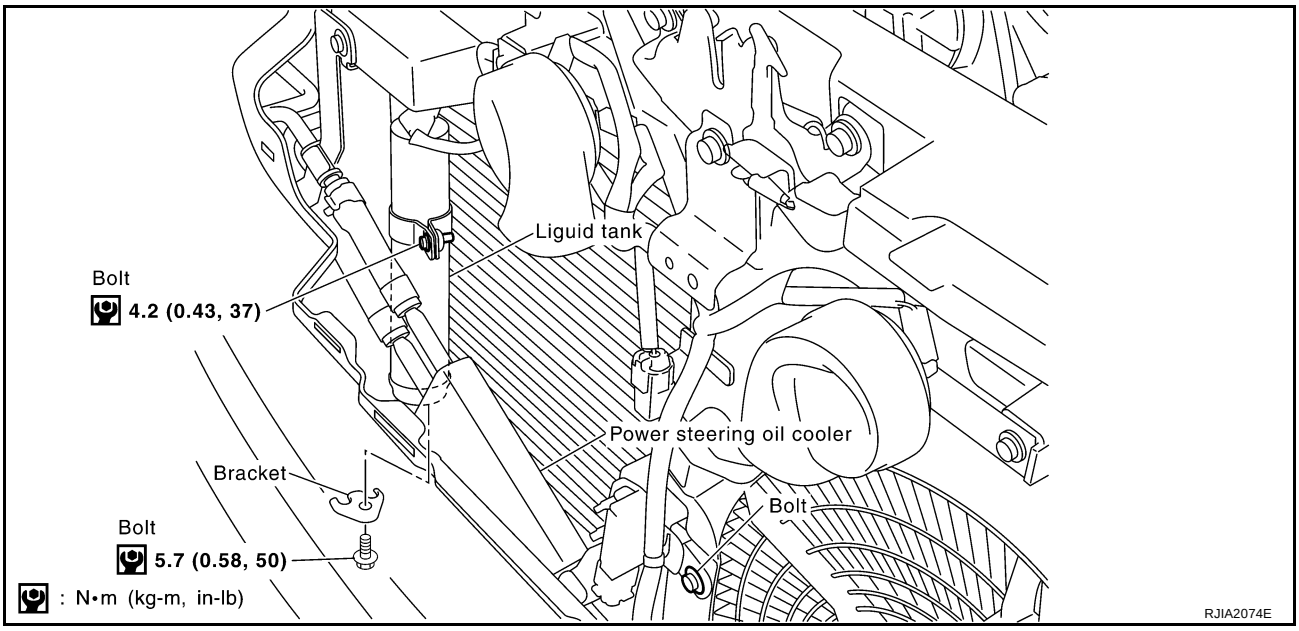

5. Lift liquid tank bracket upward. Remove bracket from protruding part of condenser.
6. Slide liquid tank upward, and then remove liquid tank.

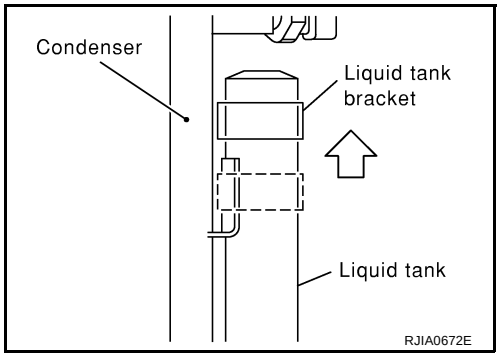

INSTALLATION

Install liquid tank, and then install liquid tank bracket on condenser.

CAUTION:

- **Make sure liquid tank bracket is securely installed at protrusion of condenser. (Make sure liquid tank bracket does not move to a position below center of liquid tank.)**
- **Replace O-rings of A/C piping with new ones, and then apply compressor oil to it when installing it.**
- **When recharging refrigerant, check for leaks.**

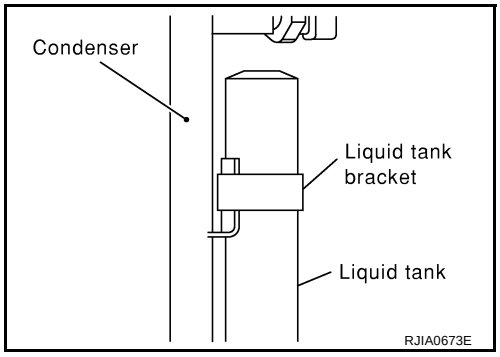

Removal and Installation of Condenser

AJS0015Z

REMOVAL

1. Use a refrigerant collecting equipment (for HFC-134a) to discharge the refrigerant.
2. Remove the air cleaner case and air duct. Refer to EM-17, "AIR CLEANER AND AIR DUCT" (VQ35DE) or EM-176, "AIR CLEANER AND AIR DUCT" (VK45DE).
3. Remove engine undercover, using power tools.
4. Drain engine coolant (VK45DE). Refer to CO-37, "Changing Engine Coolant" .
5. Remove cooling fan shroud after removing radiator upper hose (VK45DE). Refer to CO-41, "RADIATOR" .
6. Remove mounting bolt for high-pressure flexible hose bracket.

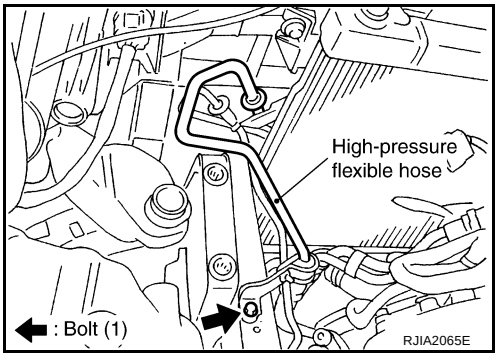

7. Disconnect high-pressure flexible hose and high-pressure pipe 1 from condenser.

a. Set a disconnector [condenser outlet (SST: 9253089908), condenser inlet (SST: 9253089912)]on A/C piping.
b. Slide a disconnector upward until it clicks.
c. Slide A/C piping upward and disconnect it.

CAUTION:
Cap or wrap the joint of the pipe with suitable material such as vinyl tape to avoid the entry of air.

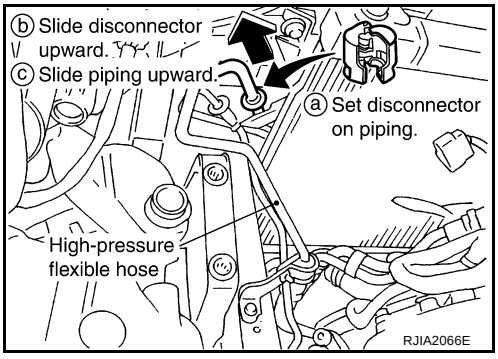

8. Remove mounting bolts for condenser.

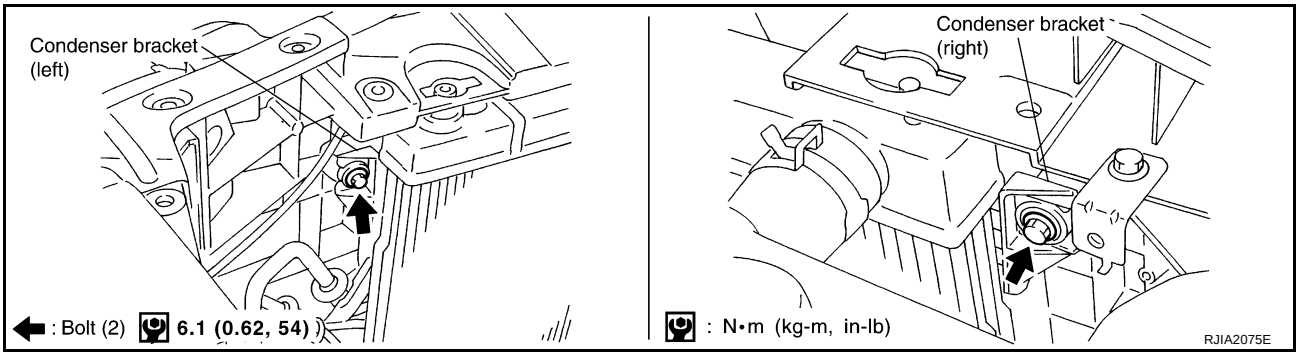

9. Remove radiator upper mount, move radiator and condenser to the engine side.
10. Remove condenser.

CAUTION:
Be careful not to damage the core surface of the condenser and the radiator.

INSTALLATION

Installation is basically the reverse order of removal.

CAUTION:

- **Replace O-rings of A/C piping with new ones, and then apply compressor oil to it when installing it.**
- **Connection point for female-side piping is thin. So, when inserting male-side piping, take care not to deform female-side piping. Slowly insert in axial direction.**
- **Insert one-touch joint connection point securely until it clicks.**

- **After piping has been connected, pull male-side piping by hand to make sure piping does not come off.**
- **When recharging refrigerant, check for leaks.**

High- pressure flexible hose bracket mounting bolt

Tightening torque : 5.5 N·m (0.56 kg-m, 49 in-lb)

Removal and Installation of Refrigerant Pressure Sensor

AJS00160

REMOVAL

1. Remove condenser. Refer to ATC-155, "Removal and Installation of Condenser" .
2. Remove refrigerant pressure sensor from condenser.

   CAUTION:
   When working, be careful not to damage the condenser.

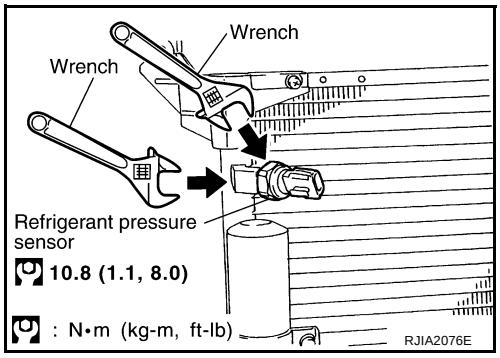

INSTALLATION

Installation is basically the reverse order of removal.

CAUTION:
Apply compressor oil to O-ring of refrigerant pressure sensor when installing it.

Removal and Installation of Evaporator

AJS001BJ

REMOVAL

1. Remove low-pressure pipe 2 and high-pressure pipe 3. Refer to ATC-152, "Removal and Installation of Low-Pressure Pipe 2 and High-Pressure Pipe 3" .

   CAUTION:
   Cap or wrap the joint of the pipe with suitable material such as vinyl tape to avoid the entry of air.
2. Slide evaporator, and then remove it from heater & cooling unit.
3. Remove intake sensor from evaporator, and then remove evaporator.

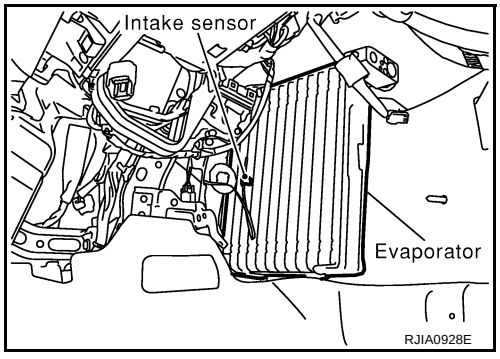

INSTALLATION

Installation is basically the reverse order of removal.

CAUTION:

- **Replace O-rings of A/C piping with new ones, and then apply compressor oil to it when installing it.**
- **Connection point for female-side piping is thin. So, when inserting male-side piping, take care not to deform female-side piping. Slowly insert in axial direction.**
- **Insert one-touch joint connection point securely until it clicks.**
- **After piping has been connected, pull male-side piping by hand to make sure piping does not come off.**
- **O-rings are different from low-pressure pipe 1 (high-pressure pipe 2) and low-pressure pipe 2 (high-pressure pipe 3).**

- **Mark the mounting position of intake sensor bracket prior to removal so that the reinstalled sensor can be located in the same position.**
- **When recharging refrigerant, check for leaks.**

Low-pressure pipe 1 bracket mounting bolt

Tightening torque : 5.5 N·m (0.56 kg-m, 49 in-lb)

Removal and Installation of Expansion Valve

AJS001BK

REMOVAL

1. Remove evaporator. Refer to ATC-156, "Removal and Installation of Evaporator" .
2. Remove mounting bolts, and then remove expansion valve.

   CAUTION:
   Cap or wrap the joint of the pipe with suitable material such as vinyl tape to avoid the entry of air.

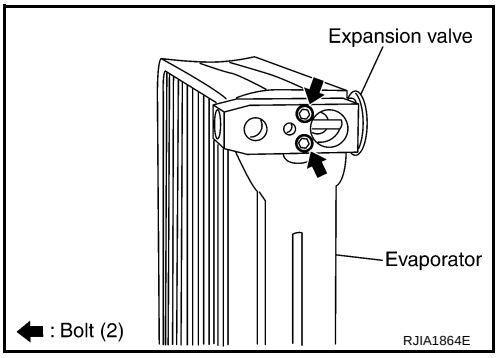

INSTALLATION

Installation is basically the reverse order of removal.

CAUTION:

- **Replace O-rings of evaporator with new ones, and then apply compressor oil to it when installing it.**
- **O-rings are different from low-pressure pipe 1 (high-pressure pipe 2) and low-pressure pipe 2 (high-pressure pipe 3).**
- **When recharging refrigerant, check for leaks.**

Checking for Refrigerant Leaks

AJS00163

Perform a visual inspection of all refrigeration parts, fittings, hoses and components for signs of A/C lubricant leakage, damage and corrosion. A/C lubricant leakage may indicate an area of refrigerant leakage. Allow extra inspection time in these areas when using either an electronic refrigerant leak detector or fluorescent dye leak detector (SST: J-42220).
If dye is observed, confirm the leak with an electronic refrigerant leak detector. It is possible a prior leak was repaired and not properly cleaned.
When searching for leaks, do not stop when one leak is found but continue to check for additional leaks at all system components and connections.
When searching for refrigerant leaks using an electronic leak detector, move the probe along the suspected leak area at 1 to 2 inches per second and no further than 1/4 inch from the component.

CAUTION:
Moving the electronic leak detector probe slower and closer to the suspected leak area will improve the chances of finding a leak.

Checking System for Leaks Using the Fluorescent Leak Detector

AJS00164

1. Check A/C system for leaks using the UV lamp and safety goggles (SST: J42220) in a low sunlight area (area without windows preferable). Illuminate all components, fittings and lines. The dye will appear as a bright green/yellow area at the point of leakage. Fluorescent dye observed at the evaporator drain opening indicates an evaporator core assembly (tubes, core or expansion valve) leak.
2. If the suspected area is difficult to see, use an adjustable mirror or wipe the area with a clean shop rag or cloth, with the UV lamp for dye residue.
3. After the leak is repaired, remove any residual dye using dye cleaner (SST: J43872) to prevent future misdiagnosis.
4. Perform a system performance check and verify the leak repair with an approved electronic refrigerant leak detector.

NOTE:
Other gases in the work area or substances on the A/C components, for example, anti-freeze, windshield washer fluid, solvents and lubricants, may falsely trigger the leak detector. Make sure the surfaces to be checked are clean.
Clean with a dry cloth or blow off with shop air.
Do not allow the sensor tip of the detector to contact with any substance. This can also cause false readings and may damage the detector.

Dye Injection

AJS00165

(This procedure is only necessary when recharging the system or when the compressor has seized and was replaced.)

1. Check A/C system static (at rest) pressure. Pressure must be at least 345 kPa (3.52 kg/cm^2 , 50 psi).
2. Pour one bottle (1/4 ounce / 7.4 cc) of the A/C refrigerant dye into the injector tool (SST: J 41459).
3. Connect the injector tool to the A/C Low-pressure side service fitting.
4. Start engine and switch A/C ON.
5. When the A/C operating (compressor running), inject one bottle (1/4 ounce / 7.4 cc) of fluorescent dye through the low-pressure service valve using dye injector tool (SST: J-41459) (refer to the manufacture's operating instructions).
6. With the engine still running, disconnect the injector tool from the service fitting.

   CAUTION:
   Be careful the A/C system or replacing a component, pour the dye directly into the open system connection and proceed with the service procedures.
7. Operate the A/C system for a minimum of 20 minutes to mix the dye with the system oil. Depending on the leak size, operating conditions and location of the leak, it may take from minutes to days for the dye to penetrate a leak and become visible.
8. Attach a blue label as necessary.

Electronic Refrigerant Leak Detector

AJS00166

PRECAUTIONS FOR HANDLING LEAK DETECTOR

When performing a refrigerant leak check, use an A/C electrical leak detector (SST) or equivalent. Ensure that the instrument is calibrated and set properly per the operating instructions.
The leak detector is a delicate device. In order to use the leak detector properly, read the operating instructions and perform any specified maintenance.

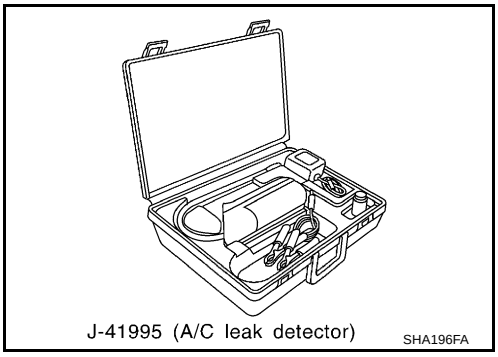

1. Position probe approximately 5 mm (3/16 in) away from point to be checked.

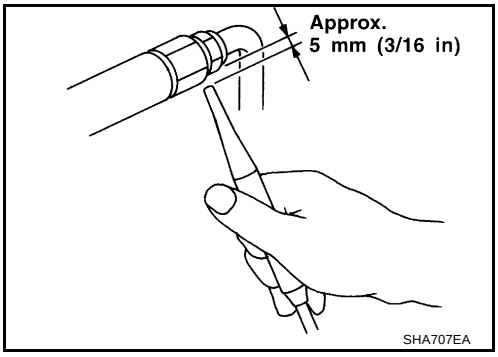

2. When testing, circle each fitting completely with probe.

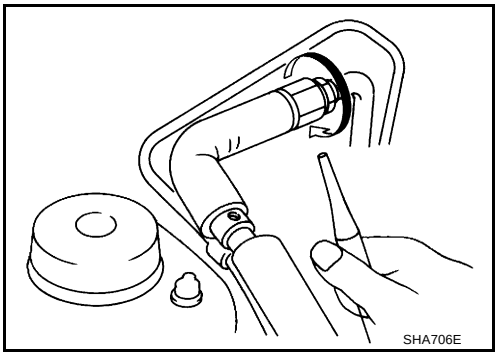

3. Move probe along component approximately 25 to 50 mm (1 to 2 in)/sec.

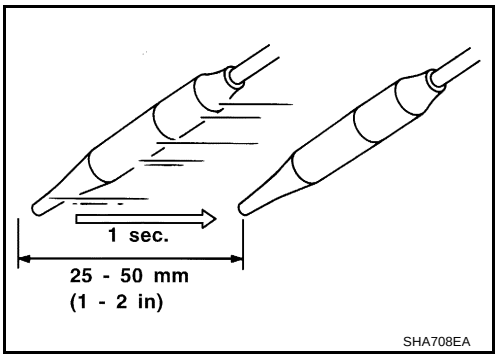

CHECKING PROCEDURE

To prevent inaccurate or false readings, make sure there is no refrigerant vapor, shop chemicals, or cigarette smoke in the vicinity of the vehicle. Perform the leak test in calm area (low air/wind movement) so that the leaking refrigerant is not dispersed.

1. Stop engine.
2. Connect a suitable A/C manifold gauge set to the A/C service ports.
3. Check if the A/C refrigerant pressure is at least 345 kPa (3.52 kg/cm^2 , 50 psi) above 16°C (61°F). If less than specification, recover/evacuate and recharge the system with the specified amount of refrigerant.

   NOTE:
   At temperatures below 16°C (61°F), leaks may not be detected since the system may not reach 345 kPa (3.52 kg/cm^2 , 50 psi).
4. Perform the leak test from the high-pressure side (compressor discharge a to evaporator inlet h) to the low-pressure side [evaporator drain hose i to shaft seal o (VK45DE) or n (VQ35DE)]. Refer to ATC-140, "Components" . Perform a leak check for the following areas carefully. Clean the component to be checked and move the leak detected probe completely around the connection/component.
   Compressor
   Check the fitting of high- and low-pressure flexible hoses, relief valve and shaft seal.
   Condenser
   Check the fitting of high-pressure flexible hose and pipe, refrigerant pressure sensor.
   Liquid tank
   Check the refrigerant connection.
   Service valves
   Check all around the service valves. Ensure service valve caps are secured on the service valves (to prevent leaks).

   NOTE:
   After removing A/C manifold gauge set from service valves, wipe any residue from valves to prevent any false readings by leak detector.
   Cooling unit (Evaporator)
   With engine OFF, turn blower fan on “High” for at least 15 seconds to dissipate any refrigerant trace in the cooling unit. Wait a minimum of 10 minutes accumulation time (refer to the manufacturer’s recommended procedure for actual wait time) before inserting the leak detector probe into the drain hose.
   Keep the probe inserted for at least 10 seconds. Use caution not to contaminate the probe tip with water or dirt that may be in the drain hose.
5. If a leak detector detects a leak, verify at least once by blowing compressed air into area of suspected leak, then repeat check as outlined above.
6. Do not stop when one leak is found. Continue to check for additional leaks at all system components.
   If no leaks are found, perform steps 7-10.
7. Start engine.
8. Set the heater A/C control as follows;

a. A/C switch: ON
b. Mode door position: VENT (Ventilation)
c. Intake position: Recirculation
d. Temperature setting: Max cold
e. Fan speed: High

9. Run engine at 1,500 rpm for at least 2 minutes.
10. Stop engine and perform leak check again following steps 4 through 6 above.
    Refrigerant leaks should be checked immediately after stopping the engine. Begin with the leak detector at the compressor. The pressure on the high-pressure side will gradually drop after refrigerant circulation stops and pressure on the low-pressure side will gradually rise, as shown in the graph. Some leaks are more easily detected when pressure is high.

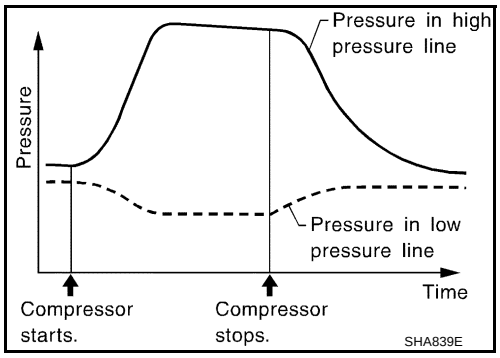

11. Before connecting recovery/recycling recharging equipment to vehicle, check recovery/recycling recharging equipment gauges. No refrigerant pressure should be displayed. If pressure is displayed, recover refrigerant from equipment lines and then check refrigerant purity.
12. Confirm refrigerant purity in supply tank using recovery/recycling recharging equipment and refrigerant identifier.
13. Confirm refrigerant purity in vehicle A/C system using recovery/recycling recharging equipment and refrigerant identifier.
14. Discharge A/C system using approved refrigerant recovery equipment. Repair the leaking fitting or component if necessary.
15. Evacuate and recharge A/C system and perform the leak test to confirm no refrigerant leaks.
16. Perform A/C performance test to ensure system works properly.

SERVICE DATA AND SPECIFICATIONS (SDS)

PFP:00030

Compressor

AJS00167

Model		Calsonic Kansei make CWV-618
Type		V-6 variable displacement
Displacement cm^3 (cu in)/rev	Max.	184 (11.228)
	Min.	14.5 (0.885)
Cylinder bore × stroke mm (in)		37 (1.46) × [2.3 - 28.6 (0.091 - 1.126)]
Direction of rotation		Clockwise (viewed from drive end)
Drive belt		Poly V

Lubricant

AJS00168

Model		Calsonic Kansei make CWV-618
Name		Nissan A/C System Oil Type S (DH-PS)
Part number		KLH00-PAGS0
Capacity m ℓ (US fl oz, Imp fl oz)	Total in system	180 (6.0, 6.3)
	Compressor (Service part) charging amount	180 (6.0, 6.3)

Refrigerant

AJS00169

Type	HFC-134a (R-134a)
Capacity kg (lb)	0.55 (1.21)

Engine Idling Speed

AJS0016A

Refer to EC-83, "Idle Speed and Ignition Timing Check" (VQ35DE) or EC-774, "Idle Speed and Ignition Timing Check" (VK45DE).

Belt Tension

AJS0016B

Refer to EM-15, "DRIVE BELTS" (VQ35DE) or EM-173, "DRIVE BELTS" (VK45DE).